MULTI F
MULTI F MAX

ART COOL™ MIRROR WALL-MOUNTED INDOOR UNIT INSTALLATION MANUAL

- LAN090HSV4 9 kBtu
- LAN120HSV4 12 kBtu
- LAN180HSV4 18 kBtu

PROPRIETARY DATA NOTICE

This document, as well as all reports, illustrations, data, information, and other materials are the property of LG Electronics U.S.A., Inc., and are disclosed by LG Electronics U.S.A., Inc., only in confidence.

Do not throw away, destroy, or lose this manual.

Please read carefully and store in a safe place for future reference.
Content familiarity required for proper installation.

The instructions included in this manual must be followed to prevent product malfunction, property damage, injury, or death to the user or other people. Incorrect operation due to ignoring any instructions will cause harm or damage. A summary of safety precautions begins on page 4.

For more technical materials such as submittals, engineering databooks, and catalogs, visit www.lghvac.com.

IM_Multi_F_ArtCoolMirrorWallMount_5_15

For continual product development, LG Electronics U.S.A., Inc., reserves the right to change specifications without notice.

©LG Electronics U.S.A., Inc.

This document, as well as all reports, illustrations, data, information, and other materials are the property of LG Electronics U.S.A., Inc.

CONTENTS

Safety Instructions 4
Introduction 9
Unit Nomenclature 11
General Data 12
Specifications 13
Typical Multi F/Multi F Max Systems 15
Refrigerant Piping Requirements 17
General Installation Guidelines 18
Location Selection 18
Inspection 19
Refrigerant Piping 22
Piping Materials and Handling 30
Piping Preparation 31
Piping Connections 32
IDU to ODU 32
Piping Insulation 35
Drain Piping 37
Electrical Wiring 38
Power Wiring Specifications and Best Practices 39
Power Wiring Specifications and Best Practices/Controller Options 40
Indoor Unit Electrical Connections Guidelines 41
Indoor Unit Electrical Connections Procedure 42
Self Diagnosis Functions 44
LG SIMS - Self Diagnosis Functions 46
Optional Wall-Mounted Sensor and Controller 48
Troubleshooting 49
Error Codes 49
Cautions for Refrigerant leaks 51
Refrigerant Leaks 51
Installation Checklist 52

Due to our policy of continuous product innovation, some specifications may change without notification.
©LG Electronics U.S.A., Inc., Englewood Cliffs, NJ. All rights reserved. "LG" is a registered trademark of LG Corp.

SAFETY INSTRUCTIONS

MULTI F
MULTI F MAX

The instructions below must be followed to prevent product malfunction, property damage, injury or death to the user or other people. Incorrect operation due to ignoring any instructions will cause harm or damage. The level of seriousness is classified by the symbols below.

TABLE OF SYMBOLS

⚠ DANGER	*This symbol indicates an imminently hazardous situation which, if not avoided, will result in death or serious injury.*
⚠ WARNING	*This symbol indicates a potentially hazardous situation which, if not avoided, could result in death or serious injury.*
⚠ CAUTION	*This symbol indicates a potentially hazardous situation which, if not avoided, may result in minor or moderate injury.*
Note:	*This symbol Indicates situations that may result in equipment or property damage accidents only.*
⃠	*This symbol indicates an action that should not be performed.*

INSTALLATION

⚠ DANGER

⃠ **Don't use or store flammable gas or combustibles near the unit.**
There is risk of fire, explosion, and physical injury or death.

⚠ WARNING

⃠ **Do not install, remove, or re-install the unit by yourself (end-user). Ask the dealer or an authorized technician to install the unit.**
Improper installation by the user may result in water leakage, fire, explosion, electric shock, physical injury or death.

For replacement of an installed unit, always contact an LG trained service provider.
There is risk of fire, electric shock, explosion, and physical injury or death.

The outdoor unit is shipped with refrigerant and the service valves closed. ⃠ **Do not open service valves on the unit until all non-condensibles have been removed from the piping system and authorization has been obtained from the commissioning agent.**
There is a risk of physical injury or death.

⃠ **Do not run the compressor with the service valves closed.**
There is risk of explosion, physical injury, or death.

Periodically check that the outdoor unit is not damaged.
There is risk of explosion, physical injury, or death.

Replace all control box and panel covers.
If cover panels are not installed securely, dust, water and animals may enter the unit, causing fire, electric shock, and physical injury or death.

Always check for system refrigerant leaks after the unit has been installed or serviced.
Exposure to high concentration levels of refrigerant gas may lead to illness or death.

⃠ **Do not install the unit using defective hanging, attaching, or mounting hardware.**
There is risk of physical injury or death.

Wear protective gloves when handling equipment.
Sharp edges may cause personal injury.

Dispose of the packing materials safely.
- *Packing materials, such as nails and other metal or wooden parts may cause puncture wounds or other injuries.*
- *Tear apart and throw away plastic packaging bags so that children may not play with them and risk suffocation and death.*

⃠ **Do not install the unit in any location exposed to open flame or extreme heat. Do not touch the unit with wet hands.**
There is risk of fire, electric shock, explosion, and physical injury or death.

Install the unit considering the potential for earthquakes.
Improper installation may cause the unit to fall, resulting in physical injury or death.

⃠ **Do not change the settings of the protection devices.**
If the pressure switch, thermal switch, or other protection device is shorted and forced to operate improperly, or parts other than those specified by LG are used, there is risk of fire, electric shock, explosion, and physical injury or death.

If the air conditioner is installed in a small space, take measures to prevent the refrigerant concentration from exceeding safety limits in the event of a refrigerant leak.
Consult the latest edition of ASHRAE (American Society of Heating, Refrigerating, and Air Conditioning Engineers) Standard 15. If the refrigerant leaks and safety limits are exceeded, it could result in personal injuries or death from oxygen depletion.

Due to our policy of continuous product innovation, some specifications may change without notification.
©LG Electronics U.S.A., Inc., Englewood Cliffs, NJ. All rights reserved. "LG" is a registered trademark of LG Corp.

INSTALLATION – CONTINUED

⚠ WARNING

Properly insulate all cold surfaces to prevent "sweating."
Cold surfaces such as uninsulated pipe can generate condensate that may drip and cause a slippery floor conditio that may lead to accidents (like falling), causing an injury.

⚠ CAUTION

Be very careful when transporting the product.

- ⃠ *Do not attempt to carry the product without assistance.*
- *Some products use polypropylene bands for packaging.* ⃠ *Do not use polypropylene bands to lift the unit.*
- *Suspend the unit from the base at specified positions.*
- *Support the unit at a minimum of four points to avoid slippage from rigging apparatus.*
- *Failure to follow these directions may result in minor or moderate physical injury.*

Note:

Properly insulate all cold surfaces to prevent "sweating."
Cold surfaces such as uninsulated pipe can generate condensate that may drip and cause water damage to walls.

When installing the unit in a hospital, mechanical room, or similar electromagnetic field (EMF) sensitive environment, provide sufficient protection against electrical noise.
Inverter equipment, power generators, high-frequency medical equipment, or radio communication equipment may cause the air conditioner to operate improperly. The unit may also affect such equipment by creating electrical noise that disturbs medical treatment or image broadcasting.

⃠ **Do not use the product for special purposes such as preserving foods, works of art, wine coolers, or other precision air conditioning applications. This equipment is designed to provide comfort cooling and heating.**
There is risk of property damage.

⃠ **Do not make refrigerant substitutions. Use R410A only.**
If a different refrigerant is used, or air mixes with original refrigerant, the unit will malfunction and become damaged.

⃠ **Do not install the unit in a noise sensitive area.**

When connecting refrigerant tubing, remember to allow for pipe expansion.
Improper piping may cause refrigerant leaks and system malfunction.

Take appropriate actions at the end of HVAC equipment life to recover, recycle, reclaim or destroy R410A refrigerant according to applicable U.S. Environmental Protection Agency (EPA) rules.

Periodically check that the outdoor unit is not damaged.
There is a risk of equipment damage.

Install the unit in a safe location where no one can step on or fall onto it. ⃠ **Do not install the unit with defective hanging, attaching, or mounting hardware.**
There is risk of unit and property damage.

Install the drain hose to ensure adequate drainage.
There is a risk of water leakage and property damage.

⃠ **Don't store or use flammable gas / combustibles near the unit.**
There is risk of product failure.

Always check for system refrigerant leaks after the unit has been installed or serviced.
Low refrigerant levels may cause product failure

The unit is shipped with refrigerant and the service valves closed. ⃠ **Do not open service valves on the unit until all non-condensibles have been removed from the piping system and authorization to do so has been obtained from the commissioning agent.**
There is a risk of refrigerant contamination, refrigerant loss and equipment damage.

Due to our policy of continuous product innovation, some specifications may change without notification.
©LG Electronics U.S.A., Inc., Englewood Cliffs, NJ. All rights reserved. "LG" is a registered trademark of LG Corp.

WIRING

⚠ DANGER

High voltage electricity is required to operate this system. Adhere to the National Electrical Codes and these instructions when wiring.
Improper connections and inadequate grounding can cause accidental injury or death.

Always ground the unit following local, state, and National Electrical Codes.

Turn the power off at the nearest disconnect before servicing the equipment.
Electric shock can cause physical injury or death.

Properly size all circuit breakers or fuses.
There is risk of fire, electric shock, explosion, physical injury or death.

⚠ WARNING

The information contained in this manual is intended for use by an industry-qualified, experienced, trained electrician familiar with the U.S. National Electric Code (NEC) who is equipped with the proper tools and test instruments.
Failure to carefully read and follow all instructions in this manual can result in equipment malfunction, property damage, personal injury or death.

Ensure the unit is connected to a dedicated power source that provides adequate power.
If the power source capacity is inadequate or the electric work is not performed properly, it may result in fire, electric shock, physical injury or death.

Refer to local, state, and federal codes, and use power wires of sufficient current capacity and rating.
Wires that are too small may generate heat and cause a fire.

Secure all field wiring connections with appropriate wire strain relief.
Improperly securing wires will create undue stress on equipment power lugs. Inadequate connections may generate heat, cause a fire and physical injury or death.

Properly tighten all power connections.
Loose wiring may overheat at connection points, causing a fire, physical injury or death.

Note:

⃠ **Do not cut, lengthen or shorten the communications and power cable between any dry contact unit and its connected indoor unit. Do not install the unit in a location where the communications and power cable cannot be safely and easily connected between the two units.** ⃠ **Do not allow strain on this cable.**
Poor cable connections can cause equipment malfunction.

Due to our policy of continuous product innovation, some specifications may change without notification.
©LG Electronics U.S.A., Inc., Englewood Cliffs, NJ. All rights reserved. "LG" is a registered trademark of LG Corp.

OPERATION

⚠ DANGER

⃠ **Do not provide power to or operate the unit if it is flooded or submerged.**
There is risk of fire, electric shock, physical injury or death.

Use a dedicated power source for this product.
There is risk of fire, electric shock, physical injury or death.

⃠ **Do not operate the disconnect switch with wet hands.**
There is risk of fire, electric shock, physical injury or death.

Periodically verify the hanging bolts and other hardware securing the unit have not deteriorated.
If the unit falls from its installed location, it can cause physical injury or death.

If refrigerant gas leaks out, ventilate the area before operating the unit.
If the unit is mounted in an enclosed, low-lying, or poorly ventilated area and the system develops a refrigerant leak, it may cause fire, electric shock, explosion, physical injury or death.

⚠ WARNING

⃠ **Do not allow water, dirt, or animals to enter the unit.**
There is risk of unit failure, fire, electric shock, physical injury or death.

Avoid excessive cooling and periodically perform ventilation to the unit.
Inadequate ventilation is a health hazard.

⃠ **Do not touch the refrigerant piping during or after operation.**
It can cause burns or frostbite.

⃠ **Do not operate the unit with the panel(s) or protective cover(s) removed; keep fingers and clothing away from moving parts.**
The rotating, hot, cold, and high-voltage parts of the unit can cause physical injury or death.

Periodically check power cable and connection for damage.
Cable must be replaced by the manufacturer, its service agent, or similar qualified persons in order to avoid physical injury and/or electric shock.

⃠ **Do not open the inlet grille of the unit during operation.**
⃠ **Do not operate the unit with the panels or guards removed.** ⃠ **Do not insert hands or other objects through the inlet or outlet when the unit is powered.** ⃠ **Do not touch the electrostatic filter, if the unit includes one. The unit contains sharp, rotating, hot, and high voltage parts that can cause personal injury and/or electric shock.**

Ensure no power is connected to the unit other than as directed in this manual. Remove power from the unit before removing or servicing the unit.
There is risk of unit failure, fire, electric shock, physical injury or death.

⃠ **Do not open the inlet grille of the unit during operation.**
⃠ **Do not operate the unit with the panels or guards removed.** ⃠ **Do not insert hands or other objects through the inlet or outlet with the unit is plugged in.** ⃠ **Do not touch the electrostatic filter, if the unit includes one.**
The unit contains sharp, rotating, hot, and high voltage parts that can cause personal injury and/or electric shock.

Securely attach the electrical cover to the unit.
Non-secured electrical covers can result in burns or electric shock due to dust or water in the service panel.

⚠ CAUTION

To avoid physical injury, use caution when cleaning or servicing the air conditioner.

Note:

Clean up the site after installation is finished, and check that no metal scraps, screws, or bits of wiring have been left inside or surrounding the unit.

⃠ **Do not use this equipment in mission critical or special-purpose applications such as preserving foods, works of art, wine coolers or refrigeration. This equipment is designed to provide comfort cooling and heating.**

Provide power to the compressor crankcase heaters at least six (6) hours before operation begins.
Starting operation with a cold compressor sump(s) may result in severe bearing damage to the compressor(s). Keep the power switch on during the operational season.

⃠ **Do not block the inlet or outlet.**
Unit may malfunction.

Periodically verify the hanging bolts and other hardware securing the unit have not deteriorated.
If the unit falls from its installed location, it can cause property damage or product failure.

Securely attach the electrical cover to the indoor unit. Non-secured covers can result in fire due to dust or water in the service panel.

Periodically verify the equipment mounts have not deteriorated.
If the base collapses, the unit could fall and cause property damage or product failure.

⃠ **Do not allow water, dirt, or animals to enter the unit.**
There is risk of unit failure.

Due to our policy of continuous product innovation, some specifications may change without notification.
©LG Electronics U.S.A., Inc., Englewood Cliffs, NJ. All rights reserved. "LG" is a registered trademark of LG Corp.

Multi F Art Cool™ Mirror Wall-Mounted Indoor Unit

Due to our policy of continuous product innovation, some specifications may change without notification.
©LG Electronics U.S.A., Inc., Englewood Cliffs, NJ. All rights reserved. "LG" is a registered trademark of LG Corp.

Multi F and Multi F MAX Art Cool™ Mirror Wall-Mounted Units

This manual describes how to install the LG Multi F and Multi F MAX (Multi Zone) Art Cool Mirror Wall-Mounted Indoor Units (IDU) for Multi F heat pump systems. Table 1 lists the available models. Refer to LG's Multi F Indoor Unit Engineering Manual for complete detailed engineering data and selection procedures.

Safety

Safety of personnel is the primary concern during all procedures. Read and understand the safety summary at the front of this manual. Read and understand this installation procedure before beginning installation. Use the appropriate tools and accessories during installation. Plan your work and do not work alone, if possible. Know how to obtain emergency medical and fire fighting assistance.

Installation Personnel

This equipment is intended for installation by personnel trained in the required construction, mechanical, electrical, and/or other disciplines.

Applicable Codes

Personnel must be familiar with and follow the applicable national, state, and/or local codes. In the event of a conflict between any applicable code and the instructions in this manual, comply with the applicable code.

Figure 1: Typical Multi F Art Cool Mirror Wall-Mounted Indoor Unit

⚠ WARNING

Installation work must be performed by trained personnel and in accordance with national wiring standards and all local or other applicable codes. Improper installation can result in fire, electric shock, physical injury, or death.

Note:

Please read all instructions before installing this product. Become familiar with the unit, its components and connections, and the order of installation. Incorrect installation can degrade or prevent proper operation.

Required Tools (field provided)

- Level
- Screwdriver
- Electrical lineman pliers
- Electric drill
- Hole saw
- Flaring tool set
- Tubing cutter
- Tube/pipe reamer
- Torque wrenches
- Allen wrench
- Gas-leak detector
- Thermometer

Required Parts (field provided)

- Connecting cable (power and control)
- Pipes - vapor line and liquid line, with insulation
- 3/8" or 1/2" Threaded hanger rods
- 3/8" or 1/2" nuts, flat washers, and lock/split washers
- Insulated drain hose
- Additional drain hose

Due to our policy of continuous product innovation, some specifications may change without notification.
©LG Electronics U.S.A., Inc., Englewood Cliffs, NJ. All rights reserved. "LG" is a registered trademark of LG Corp.

INTRODUCTION

Table 1: Multi F Art Cool Mirror Wall-Mounted Indoor Units

Typical Unit	Model Number	Nominal Capacity	
		Cooling (Btu)	Heating (Btu)
	LAN090HSV4	9,000	10,400
	LAN120HSV4	12,000	13,800
	LAN180HSV4	18,000	20,800

Table 2: Included Items

Part	Quantity	Image
Installation Plate	One (1)	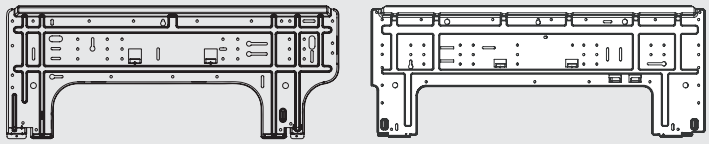 9,000 ~ 12,000 Btu/h Indoor Units 18,000 Btu/h Indoor Units
Type “A” Screws	Five (5)	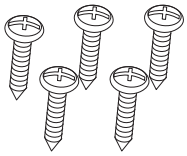
Type “B” Screws (M4 x 12L)	Two (2)	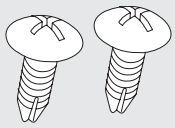
Wireless Controller with Holder HSV4: AKB73835317	One (1)	

Due to our policy of continuous product innovation, some specifications may change without notification.
©LG Electronics U.S.A., Inc., Englewood Cliffs, NJ. All rights reserved. “LG” is a registered trademark of LG Corp.

UNIT NOMENCLATURE

Multi F Multi-Zone Systems — Indoor Units

L	A	N	090	HSV	4

L = LG

Type: M = Multi-Zone

A / S = Single Zone (Gen 4 Single Zone units also compatible with Multi Zone)

Component:

AN: Art Cool™ Wall-Mounted Indoor Unit

N: Standard Wall-Mounted Indoor Unit

CN: Four-Way Ceiling-Cassette Indoor Unit

DN: Ceiling-Concealed Duct (Low Static) Indoor Unit

HN: Ceiling-Concealed Duct (High Static) Indoor Unit

VN: Vertical-Horizontal Air Handling Indoor Unit

Nominal Capacity

(Nominal cooling capacity in Btu/h):

077 = 7,000 157 = 15,000

090 = 9,000 180 = 18,000

120 = 12,000 247 = 24,000

Features:

H = Heat Pump

S = High Efficiency

V = Inverter

T = High Wall-Mounted Indoor Unit

P = Art Cool Gallery Indoor Unit

Generation or Revision

1 = First

2 = Second

3 = Third

4 = Fourth

- *Voltage for all equipment is 208-230V, 60 Hz, 1-phase.*
- *All indoor units are compatible with wired controllers*

Due to our policy of continuous product innovation, some specifications may change without notification.
©LG Electronics U.S.A., Inc., Englewood Cliffs, NJ. All rights reserved. "LG" is a registered trademark of LG Corp.

R410A Refrigerant

R410A refrigerant has a higher operating pressure in comparison to R22 refrigerant and, therefore, all piping system materials installed must have a higher resisting pressure than the materials traditionally used in R22 systems.

R410A refrigerant is an azeotrope of R32 and R125, mixed at 50:50, so the ozone depletion potential (ODP) is 0.

⚠WARNING

⃠ *Do not place refrigerant cylinder in direct sunlight. Refrigerant cylinder may explode causing severe injury or death.*

Note

- *Because R410A is a combination of R32 and R125, the required additional refrigerant must be charged in its liquid state. If the refrigerant is charged in its gaseous state, its composition changes and the system will not work properly.*
- ⃠ *Do not heat piping more than necessary during installation. Piping may become soft and fail when pressurized.*
- ⃠ *Do not use any piping that has not been approved for use in high-pressure refrigerant systems. Piping wall thickness must comply with the applicable local, state, and federal codes for the 551 psi design pressure of R410A. Inadequate piping may fail when pressurized.*

Allowable Indoor Unit to Outdoor Unit Connections

In Multi F/Multi Zone systems, the Art Cool Mirror wall-mounted IDUs can be connected to the Multi F outdoor units (ODUs) listed in Table 3.

Table 3: Allowable Indoor Unit to Outdoor Unit Connections.

Indoor units		Outdoor units					
Model Number	Indoor Unit Nominal Capacity (Btu/h)	LMU18CHV	LMU24CHV	LMU30CHV	LMU36CHV	LMU480HV	LMU540HV
		Maximum No. of Connectable Indoor Units					
		2	3	4	4	8	8
LAN090HSV4	9,000	O	O	O	O	O	O
LAN120HSV4	12,000	O	O	O	O	O	O
LAN180HSV4	18,000	–	O	O	O	O	O

connection allowed: O
connection not allowed: –

Device Connection Limitations

- The minimum number of connected and operating indoor units to Multi F / Multi F MAX systems is two.
- The maximum number of indoor units for each Multi F / Multi F MAX heat pump system is:

  LMU18CHV = 2 LMU30CHV = 4 LMU480HV = 8

  LMU24CHV = 3 LMU36CHV = 4 LMU540HV = 8

- The maximum allowable total indoor unit capacity (Btu/h) for each Multi F / Multi F MAX heat pump system is:

  LMU18CHV = 24,000 LMU30CHV = 40,000 LMU480HV = 65,000

  LMU24CHV = 33,000 LMU36CHV = 48,000 LMU540HV = 73,000

- Refer to the Multi F Engineering Manual to properly determine total indoor unit connected capacity.

Due to our policy of continuous product innovation, some specifications may change without notification.
©LG Electronics U.S.A., Inc., Englewood Cliffs, NJ. All rights reserved. "LG" is a registered trademark of LG Corp.

Table 4: Multi F Multi Zone Art Cool Mirror Wall-Mounted Indoor Unit Specifications

Model Name	LAN090HSV4	LAN120HSV4	LAN180HSV4
Nominal Cooling Capacity (Btu/h)[1]	9,000	12,000	18,000
Nominal Heating Capacity (Btu/h)[1]	10,400	13,800	20,800
Operating Range			
Cooling (°F WB)	57-77		
Heating (°F DB)	59-81		
Fan			
Type	Cross Flow		
Motor Output (W) x Qty.	14.4 x 1		76.0 x 1
Motor/Drive	Brushless Digitally Controlled / Direct		
Airflow Rate CFM (H/M/L)	247 / 230 / 212	335 / 318 / 300	572 / 501 / 434
Unit Data			
Refrigerant Type[2]	R410A		
Refrigerant Control	Electronic Expansion Valve (EEV)		
Power Supply V, Ø, Hz[3]	208-230, 1, 60		
Rated Amps (A)	0.2		0.3
Sound Pressure Level ±3 dB(A) (H/M/L)[4]	33 / 30 / 27	39 / 36 / 31	37 / 33 / 28
Dimensions (W x H x D, in.)	34-13/16 x 11-1/4 x 8-1/16	34-13/16 x 11-1/4 x 8-1/16	40-9/16 x 12-13/16 x 9-11/16
Net Unit Weight (lbs.)	24		32
Shipping Weight (lbs.)	29		39
Power Wiring / Communications Cable (No. x AWG)[5]	4 x 18		
Heat Exchanger (Row x Column x Fin / inch) x No.	(2 x 16 x 23) x 1		(3 x 18 x 22) x 1
Pipe Size			
Liquid (in.)	1/4		
Vapor (in.)	3/8		1/2
Connection Size			
Liquid (in.)	1/4		3/8
Vapor (in.)	3/8		5/8
Drain O.D. / I.D. (in.)	27/32, 5/8		

[1]Nominal capacity is rated 0 ft. above sea level with corresponding refrigerant piping length in accordance with standard length of each outdoor unit and a 0 ft. level difference between outdoor and indoor units. All capacities are net with a combination ratio between 95 – 105%.

Nominal cooling capacity rating obtained with air entering the indoor unit at 80ºF dry bulb (DB) and 67ºF wet bulb (WB) and outdoor ambient conditions of 95ºF dry bulb (DB) and 75ºF wet bulb (WB).

Nominal heating capacity rating obtained with air entering the indoor unit at 70ºF dry bulb (DB) and 60ºF wet bulb (WB) and outdoor ambient conditions of 47ºF dry bulb (DB) and 43ºF wet bulb (WB).

[2]This unit comes with a dry helium charge.

[3]Acceptable operating voltage: 187V-253V.

[4]Sound pressure levels are tested in an anechoic chamber under ISO Standard 3745 and are the same in both cooling and heating mode. These values can increase due to ambient conditions during operation.

[5]All power wiring / communications cable to be minimum 18 AWG, 4-conductor, stranded, shielded, and must comply with applicable local and national codes.

Due to our policy of continuous product innovation, some specifications may change without notification.
©LG Electronics U.S.A., Inc., Englewood Cliffs, NJ. All rights reserved. "LG" is a registered trademark of LG Corp.

Figure 2: LAN090-120-180HSV4 Refrigerant Piping Diagram

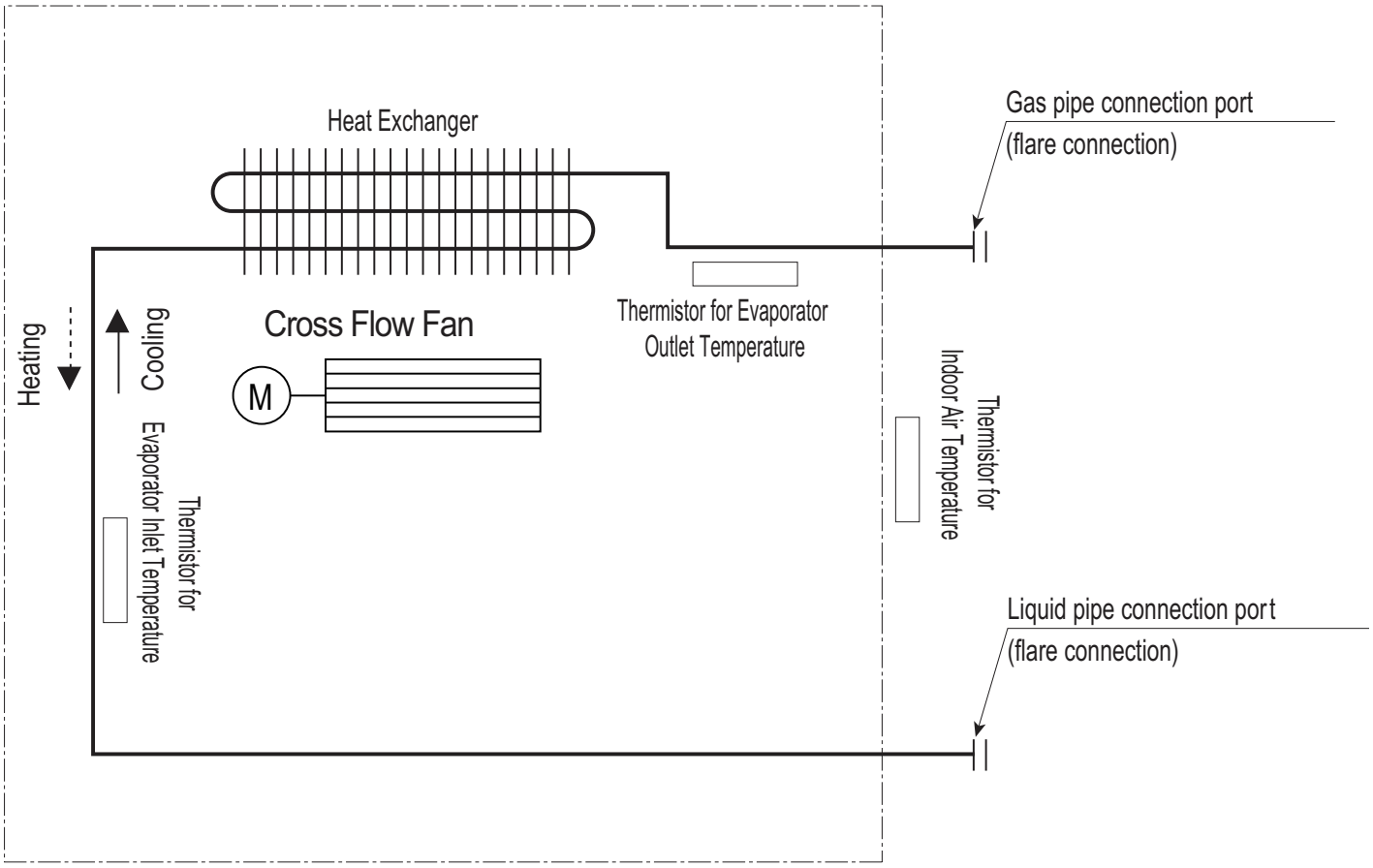

Table 5: Multi F Multi Zone Art Cool Mirror Wall-Mounted Indoor Unit Refrigerant Pipe Connection Port Diameters

Model No.	Vapor (inch)	Liquid (inch)
LAN090HSV4	Ø3/8	Ø1/4
LAN120HSV4		
LAN180HSV4	Ø5/8	Ø3/8

Due to our policy of continuous product innovation, some specifications may change without notification.
©LG Electronics U.S.A., Inc., Englewood Cliffs, NJ. All rights reserved. "LG" is a registered trademark of LG Corp.

Major System Components

A typical Multi F system consists of an outdoor unit (ODU), refrigerant piping, and two (2) to four (4) indoor units (IDUs). The Art Cool Mirror wall-mounted units described in this manual are one of the types of IDUs that can be connected to a Multi F system.

A typical Multi F Max system consists of an ODU, refrigerant piping, one or two branch distribution units (BDU), and two (2) to eight (8) IDUs. The Art Cool Mirror wall-mounted units described in this manual are one of the types of IDUs that can be connected to a Multi F Max system.

Typical Multi F System

Example: LMU36CHV outdoor unit with four (4) indoor units connected.

ODU: Outdoor Unit.

IDU: Indoor Unit.

A, B, C, D: Piping from Outdoor Unit to Indoor Unit.

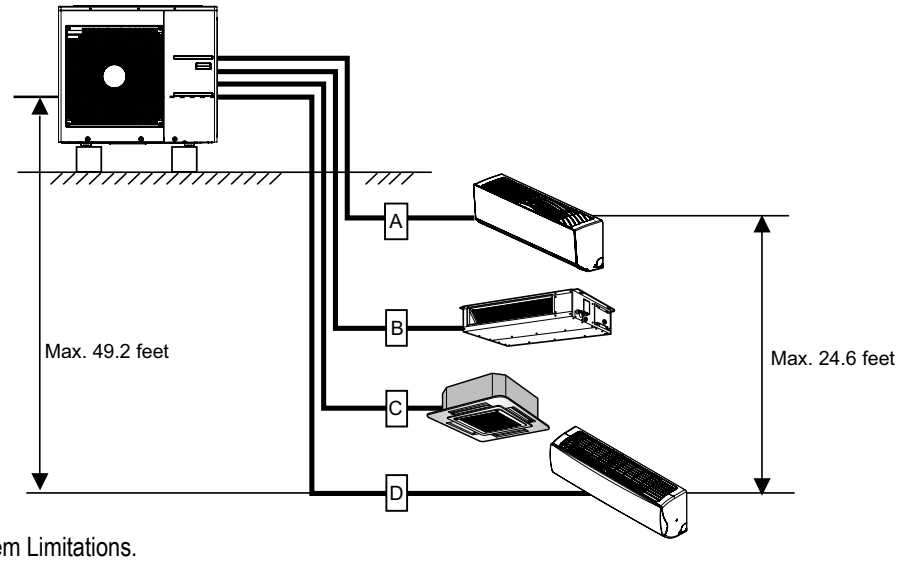

Table 6: Multi F Outdoor Unit Refrigerant Piping System Limitations.

Outdoor Unit	Minimum Length for Each Pipe Segment (ft.)	Maximum Equivalent Pipe Length to Each Indoor Unit (ft.)				Maximum Equivalent Pipe Length for Each System (ft.)
		A	B	C	D	
LMU18CHV	10	82	82	-	-	164
LMU24CHV	10	82	82	82	-	246.1
LMU30CHV	10	82	82	82	82	246.1
LMU36CHV	10	82	82	82	82	246.1

Typical Multi F MAX System with One Branch Distribution Unit

Example: LMU540HV outdoor unit with four (4) indoor units, and one (1) branch distribution unit connected.

ODU: Outdoor Unit.

IDU: Indoor Unit.

BDU: Branch Distribution Unit.

A: Main Piping.

B: Branch Piping (Branch Distribution Unit to Indoor Unit[s]).

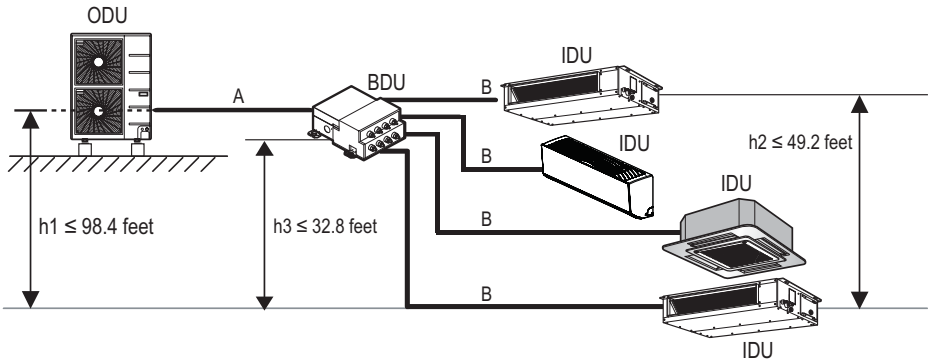

Due to our policy of continuous product innovation, some specifications may change without notification.
©LG Electronics U.S.A., Inc., Englewood Cliffs, NJ. All rights reserved. "LG" is a registered trademark of LG Corp.

Typical Multi F MAX System with Two Branch Distribution Units

Example: LMU540HV outdoor unit with seven (7) indoor units, and two (2) branch distribution units connected.

ODU: Outdoor Unit.

IDU: Indoor Unit.

BD: Branch Distribution Unit(s).

ΣA: Main Piping.

ΣB: Branch Piping (Branch Distribution Unit[s] to Indoor Unit[s]).

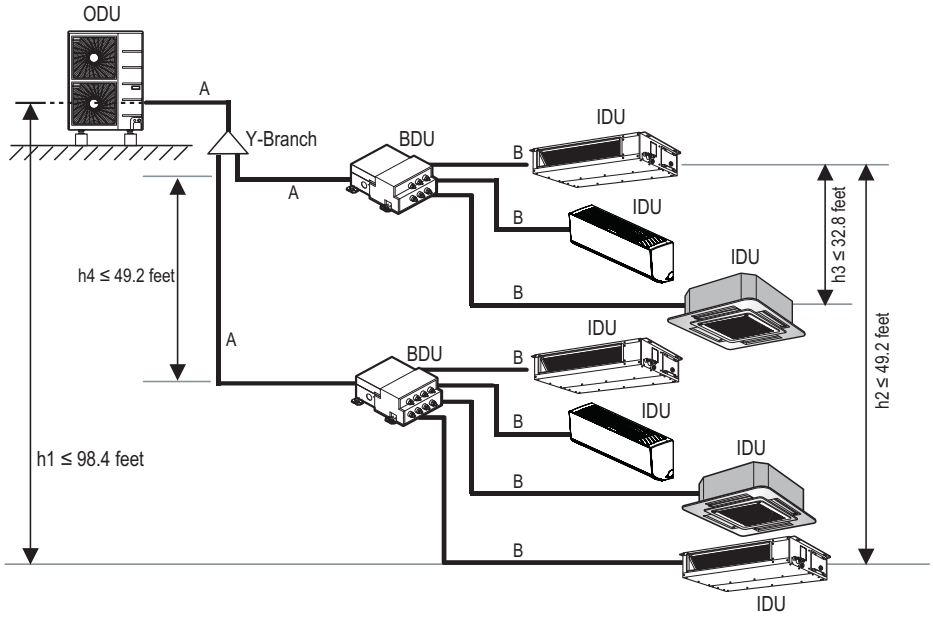

Table 7: Multi F MAX LMU480HV and LMU540HV Outdoor Unit Refrigerant Piping System Limitations.

Pipe Length (ELF = Equivalent Length of pipe in Feet)	Total piping length (ΣA + ΣB)		≤475.7 feet
	Main pipe (Outdoor Unit to Branch Distribution Units: ΣA)	Minimum	10 feet
		Maximum	≤180.4 feet
	Total branch piping length (ΣB)		≤295.3 feet
	Branch pipe (Branch Distribution Units to Indoor Units: B)	Minimum	10 feet
		Maximum	≤49.2 feet
Elevation Differential (All Elevation Limitations are Measured in Actual Feet)	If outdoor unit is above or below indoor unit (h1)		≤98.4 feet
	Between the farthest two indoor units (h2)		≤42.9 feet
	Between branch distribution unit and farthest connected indoor unit(s) (h3)		≤32.8 feet
	Between branch distribution units (h4)		≤42.9 feet

Table 8: Multi F MAX Piping Sizes.

Model	Piping	Main Pipe A (inch)	Branch Pipe B
LMU480HV	Liquid	Ø3/8	Depends on the size of the indoor unit piping
	Gas	Ø3/4	
LMU540HV	Liquid	Ø3/8	Depends on the size of the indoor unit piping
	Gas	Ø3/4	

Due to our policy of continuous product innovation, some specifications may change without notification.
©LG Electronics U.S.A., Inc., Englewood Cliffs, NJ. All rights reserved. "LG" is a registered trademark of LG Corp.

Field Supplied Refrigerant Piping

Type ACR copper is the only approved refrigerant pipe material for use with LG Multi F air conditioning products. ACR rated tubing is the only type that ships with yellow caps. Approved tubing for use with Multi F products will be marked “R410 RATED” along the length of the tube. Tube wall thickness should meet local code requirements and be approved for a maximum operating pressure of 551 psi.

Refer to the refrigerant piping section (starting on page 22) of the General Installation Guidelines for more information on piping.

Using Refrigerant Components

Field-supplied elbows are allowed if they are long radius and designed for use with R410A refrigerant. Be sure to account for the additional pressure losses in equivalent pipe length calculations for each elbow, Y-branch, and branch distribution unit. The equivalent pipe length of each elbow, Y-branch, and/or branch distribution unit must be added to each pipe segment to ensure maximum lengths are not exceeded.

Table 9: Equivalent Piping Length for Elbows, Y-branches, and Branch Distribution Units.

Component	Size (Inches)				
	1/4	3/8	1/2	5/8	3/4
Elbow (ft.)	0.5	0.6	0.7	0.8	1.2
Y-Branch Kit (ft.) (Multi F MAX systems only)[1]	1.6				
Branch Distribution Unit (ft.) (Multi F MAX systems only)	8.2				

[1]Kit contains two Y-branches: one for liquid and one for vapor.

Due to our policy of continuous product innovation, some specifications may change without notification.
©LG Electronics U.S.A., Inc., Englewood Cliffs, NJ. All rights reserved. “LG” is a registered trademark of LG Corp.

GENERAL INSTALLATION GUIDELINES

Location Selection

MULTI F
MULTI F MAX

⚠ DANGER

To avoid the possibility of fire, do not install the unit in an area where combustible gas may generate, flow, stagnate, or leak. Installing the unit in an area containing combustible gas will cause serious bodily injury or death. Before beginning installation, read the safety summary at the beginning of this manual.

Select a location for installing the Art Cool Mirror wall-mounted indoor unit (IDU) that meets the following conditions:

- Where there is enough structural strength to bear the weight of the unit.
- Where air circulation will not be blocked.
- Where noise prevention is taken into consideration.
- Ensure there is sufficient space from the ceiling and floor.
- Locate the indoor unit in a location where it can be easily connected to the outdoor unit / branch distribution unit.
- Include space for drainage to ensure condensate flows properly out of the unit when it is in cooling mode.
- Use a level indicator to ensure the unit is installed on a level plane.

Note:

The unit may be damaged, may malfunction, and / or will not operate as designed if installed in any of the following conditions:

- Do not install the unit where it will be subjected to direct thermal radiation from other heat sources.
- Do not install the unit in an area where combustible gas may generate, flow, stagnate, or leak.
- Do not install the unit in a location where acidic solution and spray (sulfur) are often used.
- Do not use the unit in environments where oil, steam, or sulfuric gas are present.
- Do not install additional ventilation products on the chassis of the unit.
- Do not install the unit near high-frequency generator sources.
- Do not install the unit near a doorway.

Installing in an Area Exposed to Unconditioned Air

In some installation applications, areas (floors, walls) in some rooms may be exposed to unconditioned air (room may be above or next to an unheated garage or storeroom). To countermeasure:

- Verify that carpet is or will be installed (carpet may increase the temperature by three degrees).
- Add insulation between the floor joists.
- Install radiant heat or another type of heating system to the floor.

Required Clearances

Figure 6 shows required clearance distances around a typical installed wall-mounted unit.

Figure 2: Required Clearances Around Typical Installed Unit

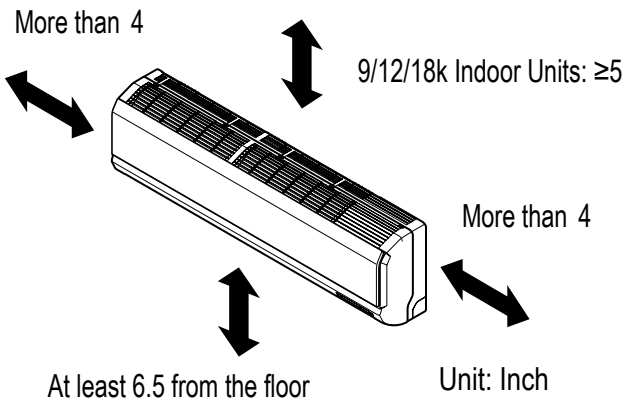

Due to our policy of continuous product innovation, some specifications may change without notification.
©LG Electronics U.S.A., Inc., Englewood Cliffs, NJ. All rights reserved. "LG" is a registered trademark of LG Corp.

Unpack and Inspect for Freight Damage

⚠ CAUTION

Shipping and net weights of the wall-mounted units are listed in Table 4. To help avoid injury to personnel and damage to the unit, use two people when carrying a unit by hand.

Note:

⃠ Do not unpack the unit and remove the protective materials until ready to install. Before unpacking, carefully move the packaged unit to a work area near the installation location.

After opening, if the unit is damaged, repack the unit as it was shipped to you. RETAIN ALL PACKING MATERIALS. In general, freight damage claims will be denied if the original packing materials are not retained for the claims adjustor to inspect. Contact your supervisor on how to proceed with filing a freight claim and to order a replacement unit.

Note:

Before opening the shipping container, check the container labeling to verify the unit received is the correct unit. Verify the unit capacity, type, and voltage. Refer to the chart on "Dimensions of the Flare" on page 31.

1. Before opening the shipping container, verify you have the correct unit as described in the Note above.
2. Place the box on a solid surface right side up.
3. Cut the white reinforced nylon straps.
4. Open the top of the box and fold back all four flaps.
5. Remove the protective cardboard / Styrofoam® top sheet and place to the side.
6. The walls and top panels are not attached to the bottom of the box. Lift the cardboard carton by the flaps and remove the box walls and top and place it to the side.
7. Remove the moisture barrier plastic bonnet.
8. Check the unit nameplate data and model number. Verify the unit voltage, and capacities are correct before proceeding.
9. Locate and retain the piping/condensate accessory kit located in the bottom of the box under the refrigerant pipe stubs.
10. Using two people, carefully lift the unit and inspect for freight damage. ⃠ DO NOT lift by the refrigerant piping or drain pipe stub. Lift by the hangar brackets or chassis frame only. If damage is found, repack the unit as it was received in the original container.
11. If the unit is undamaged, remove and retain the installation manual. It is located under or on top of the unit.

Due to our policy of continuous product innovation, some specifications may change without notification.
©LG Electronics U.S.A., Inc., Englewood Cliffs, NJ. All rights reserved. "LG" is a registered trademark of LG Corp.

GENERAL INSTALLATION GUIDELINES

Install Wall-Mounted IDU Chassis

MULTI F
MULTI F MAX

⚠ WARNING

- *Mounting hardware must be securely installed to prevent the chassis falling from its installation location. There is risk of personnel injury or property damage from falling equipment.*
- *When choosing a location for the wall mount plate, be sure to take into consideration routing of wiring for power outlets within the wall. Touching wiring can cause serious bodily injury or death.*
- *Installation work must be performed by trained personnel and in accordance with all local or other applicable codes. There is risk of injury to personnel from incorrect installation.*

Note:

- *Ensure the unit is properly installed. Incorrectly installed units can result in degraded performance or an inoperative unit / system.*
- *Use a level indicator to ensure the installation plate and chassis are installed on a level plane.*
- *If the unit is installed near a body of water, certain components are at risk of being corroded. Appropriate anti-corrosion methods should be taken for the unit and all components.*

Mounting the Installation Plate

The mounting wall should be strong and solid enough to protect the unit from vibration. It should securely hold the installation plate and the weight of the chassis.

1. Determine the installation location.
2. Refer to Figure 3 or Figure 4 for the appropriate mounting diagram.
3. Mount the installation plate on the wall using the Type “A” screws. If mounting the unit on concrete, consider using anchor bolts. Use a level to ensure the plate is level.
4. Always mount the installation plate horizontally. Measure the wall and mark the centerline using thread and a level.

Figure 3: Installation Plate for LAN090HSV4, LAN120HSV4 Units.

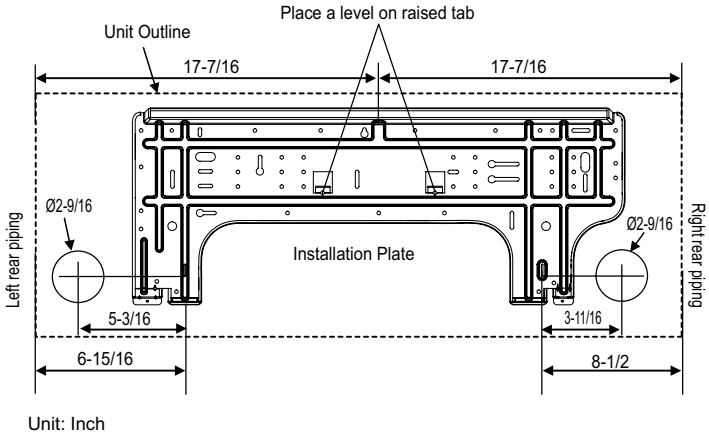

Figure 4: Installation Plate for LAN180HSV4 Units.

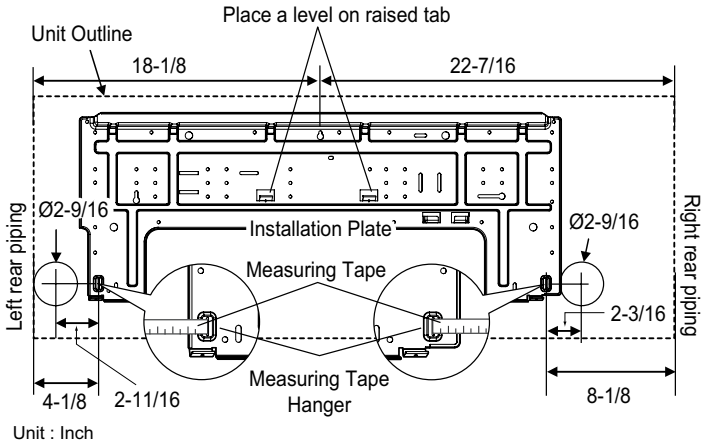

Figure 5: Installation Plates Attaching Screw Placement.

Installation Plate Screws - LAN090HSV4, LAN120HSV4

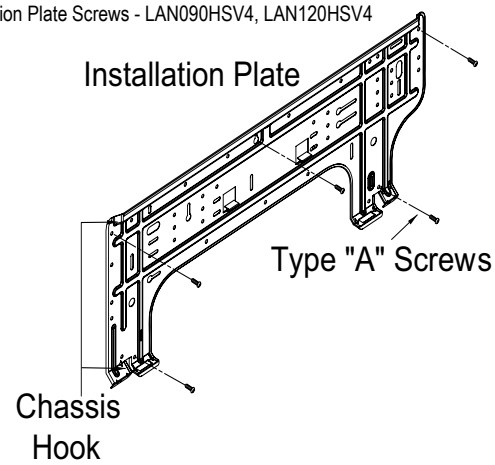

Installation Plate Screws - LAN180HSV4

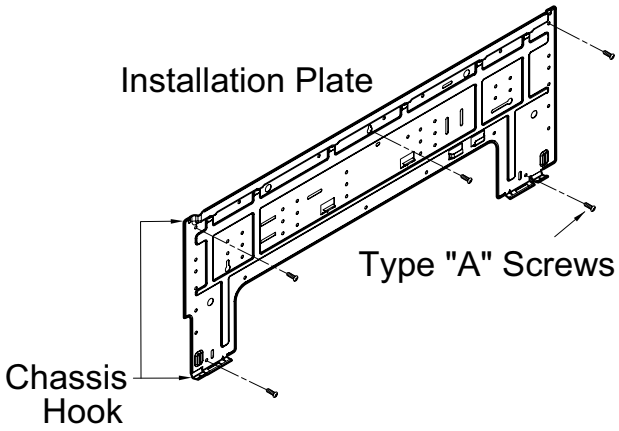

Due to our policy of continuous product innovation, some specifications may change without notification.
©LG Electronics U.S.A., Inc., Englewood Cliffs, NJ. All rights reserved. “LG” is a registered trademark of LG Corp.

Drilling Piping Hole in the Wall

⚠WARNING

Use caution when drilling holes through walls. Drilling into power wiring in the wall can cause serious bodily injury or death.

Follow the left or right piping clearance recommendations in Figure 3 or Figure 4.

1. Using a 2-5/8 (ø 65mm) inch hole core drill bit, drill a hole at either the right or left side of the wall mounting (Figure 6). The hole should slant 3/16" to 5/16" from level (upward on the indoor unit side and downward on the outdoor unit side).
2. Finish off the newly drilled hole as shown with bushing and sleeve covering. Sleeve and bushing prevents damage to the tubing / bundling of the piping.

Figure 6: Drilling Piping Hole

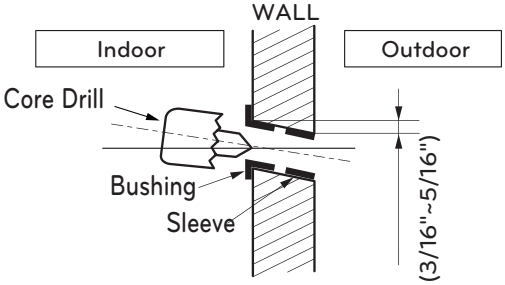

Hanging the Indoor Unit Chassis

1. Attach the three (3) hooks on the top of the indoor unit to the top edge of the installation plate. Verify the hooks are properly attached to the installation plate by gently shaking the indoor unit from side to side.
2. Unlock the tubing clamp from the indoor unit frame. For easier access between the bottom of the indoor unit and the wall, prop the clamp between the indoor unit frame and installation plate.
3. Remove the screw covers at the bottom of the indoor unit, unscrew the two (2) screws, remove the frame cover, remove the piping connection cover, and position the piping for installation (down, back, left, or right).

Figure 7: Locking the Indoor Unit onto the Installation Plate.

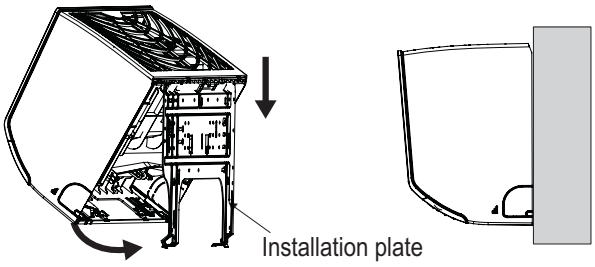

Figure 8: Accessing the Back of the Indoor Unit.

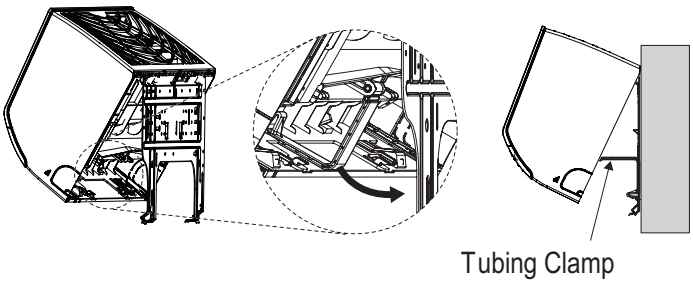

Figure 9: Removing the Frame Cover.

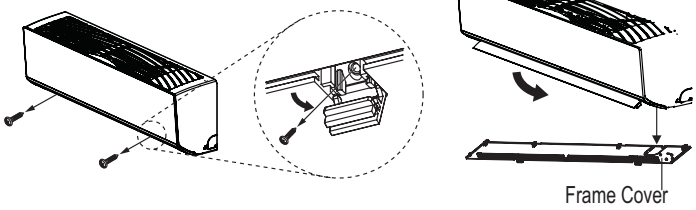

Figure 10: Exterior Back View of Indoor Unit.

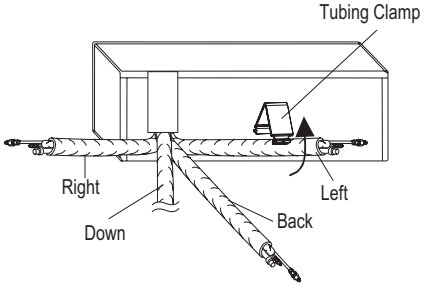

Figure 11: Piping Installed to the Left.

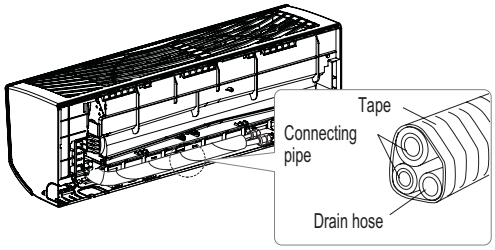

Figure 12: Piping Installed to the Right.

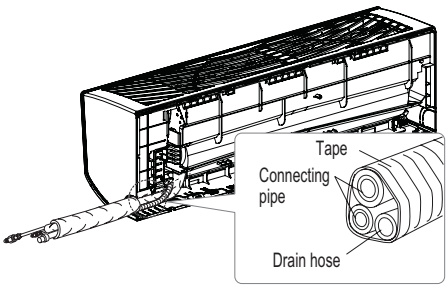

Due to our policy of continuous product innovation, some specifications may change without notification.
©LG Electronics U.S.A., Inc., Englewood Cliffs, NJ. All rights reserved. "LG" is a registered trademark of LG Corp.

Preparing for Piping Installation to the Indoor Unit

Note:

Do not bend the piping / drain hose from side to side, it may damage the components.

Prepare the refrigerant piping and drain hose (indoor unit piping) for installation through the wall. Press on the top of the tubing clamp and slowly guide the piping / hose down (depending on installation requirements, then to the left or right). Relock the tubing clamp after the piping / hose are released.

No Pipe Size Substitutions

Use only the pipe size selected by the LATS Multi F pipe system design software or as conveyed in the product installation instructions. Using a different size is prohibited and may result in a system malfunction or failure to work at all.

Pipe Slope

The horizontal pipe slope cannot exceed 10° up or down.

In-line Refrigeration Components

Components such as oil traps, solenoid valves, filter-dryers, sight glasses, tee fittings, and other after-market accessories are not permitted on the refrigerant piping system between the outdoor units and the indoor / branch distribution units.

Multi F / Multi F Max systems have redundant systems that ensure oil is properly returned to the compressor. Sight-glasses and solenoid valves may cause vapor to form in the liquid stream.

Note:

Over time, dryers may deteriorate and introduce debris into the system. The designer and installer should verify the refrigerant piping system is free of traps, sagging pipes, sight glasses, filter dryers, etc.

Field-Provided Isolation Ball Valves

LG recommends installing field-supplied ball valves with Schrader ports at each indoor unit. Full-port isolation ball valves with Schrader ports (positioned between valve and indoor unit) rated for use with R410A refrigerant should be used on both the liquid and vapor lines.

For Multi F MAX systems, position valves with a minimum distance of three (3) to six (6) inches of pipe on either side of the valve, and between six (6) and twelve (12) inches from the first upstream Y-branch or branch distribution unit. If ball valves are installed away from the first Y-branch and / or branch distribution unit and closer to the indoor unit, oil may accumulate where it cannot be returned to the outdoor unit and may cause a shortage of oil in the compressor.

Valves should be easily accessible for service. If necessary, install drywall access doors or removable ceiling panels, and position the valves to face the access door or ceiling panel opening. Mount valves with adequate space between them to allow for placement of adequate pipe insulation around the valves.

Obstacles

When an obstacle, such as an I-beam or concrete T, is in the path of the planned refrigerant pipe run, it is best practice to route the pipe over the obstacle. If adequate space is not available to route the insulated pipe over the obstacle, then route the pipe under the obstacle. In either case, it is imperative the horizontal section of pipe above or below the obstacle be a minimum of three (3) times greater than the longest vertical rise (or fall) distance.

Figure 13: Installing Piping Above and Below an Obstacle.

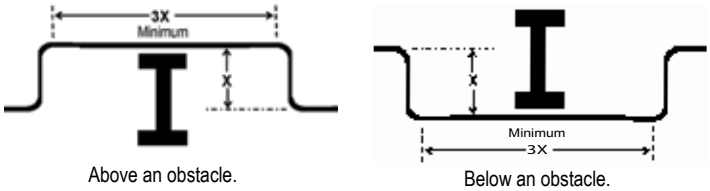

Above an obstacle. Below an obstacle.

Due to our policy of continuous product innovation, some specifications may change without notification.
©LG Electronics U.S.A., Inc., Englewood Cliffs, NJ. All rights reserved. "LG" is a registered trademark of LG Corp.

Multi F MAX Y-Branch Kit PMBL5620

The LG supplied Y-Branch Kit PMBL5620 MUST be used when two branch distribution units are connected to one Multi F MAX system. Field-supplied fittings are not permitted. Each Y-Branch kit comes with two (2) Y-branches (one for the liquid line and one for the vapor line) and insulation covers.

Y-branches may be installed in horizontal or vertical configurations. When installed vertically, position the Y-branch so the straight-through leg is ±3° of plumb. When installed horizontally, position the Y-branch so the take-off leg is level and shares the same horizontal plane as the straight-through leg ±5° rotation.

Y-branches should always be installed with the single port facing the outdoor unit and the two-port end facing the branch distribution units. Do not install Y-branches backwards as refrigerant flow cannot make U-turns. The Y-branch kit must be located at least three (3) feet from the outdoor unit. Provide a minimum of 20 inches between a Y-branch and the branch distribution unit.

Figure 14: Y-Branch Port Identification and Dimensions.

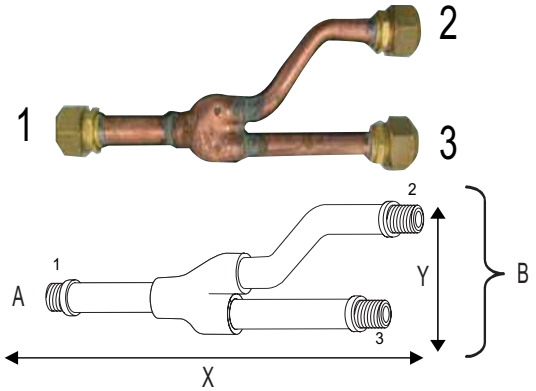

A = To Outdoor Unit
B = To Branch Distribution Unit

Table 11: Multi F MAX Y-Branch Connection Diameters.

Model	Y-Branch Type	Port Identifier (inch)		
		1	2	3
PMBL5620	Liquid	Ø3/8	Ø3/8	Ø3/8
	Vapor	Ø3/4	Ø3/4	Ø3/4
	Y-Branch Type	**Dimensions (inch)**		
		X	**Y**	
	Liquid	13.80	3.24	
	Vapor	12.48	3.02	

Figure 15: Y-branch Horizontal Installation Alignment.

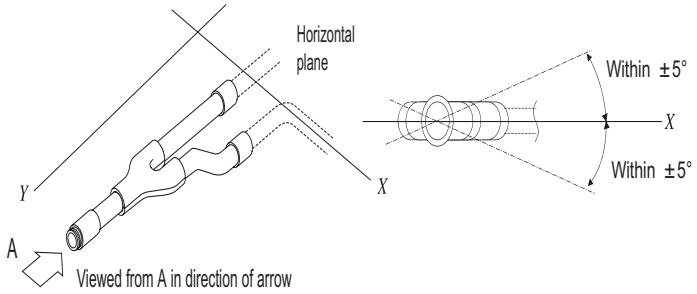

Figure 16: Y-branch Vertical Installation Alignment.

Vertical Up Configuration Vertical Down Configuration

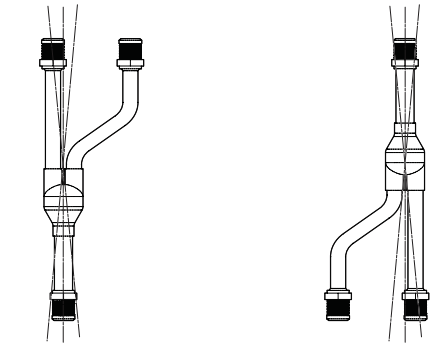

Within ± 3° Within ± 3°

Y-Branch Kit Insulation

Each Y-branch kit comes with clam-shell type peel-and-stick insulation jackets molded to fit the Y-branch fittings—one for the liquid line, one for the vapor line.

Table 10: Insulation Jacket Properties.

Material	Polyolefin Foam
UL94 Flame Classification	HF-1
Density	1.84 lbs./ft.^{3}
Thermal Conductivity	.0208 Btu/h/ft. ºR
Thickness	1/2 inch

Figure 17: Y-Branch Insulation Jacket Diagram.

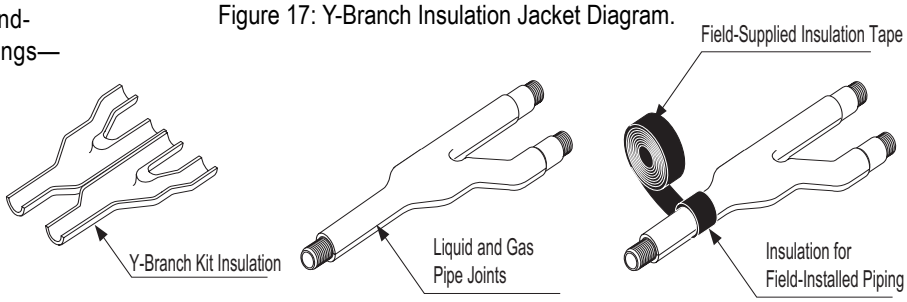

Due to our policy of continuous product innovation, some specifications may change without notification.
©LG Electronics U.S.A., Inc., Englewood Cliffs, NJ. All rights reserved. "LG" is a registered trademark of LG Corp.

Selecting Field-Supplied Copper Tubing

Copper is the only approved refrigerant pipe material for use with Duct Free System Single Zone products, and LG recommends seamless phosphorous deoxidized ACR type copper pipe, hard-drawn rigid type “K” or “L”, or annealed-tempered, copper pipe.

- Drawn temper (rigid) ACR copper tubing is available in sizes 3/8 through 2-1/8 inches (ASTM B 280, clean, dry, and capped).
- Annealed temper (soft) ACR copper tubing is available in sizes 1/4 through 2-1/8 inches (ASTM B 280, clean, dry, and capped).

Note:

Tube wall thickness should meet local code requirements and be approved for an operating pressure of 551 psi. If local code does not specify wall thickness, LG suggests using tube thickness per table below. When bending tubing, try to keep the number of bends to a minimum, and use the largest radii possible to reduce the equivalent length of installed pipe; also, bending radii greater than ten (10) pipe diameters can minimize pressure drop. Be sure no traps or sags are present when rolling out soft copper tubing coils.

Table 12: ACR Copper Tubing Material

Type	Seamless Phosphorous Deoxidized
Class	UNS C12200 DHP
Straight Lengths	H58 Temper
Coils	O60 Temper

Table 13: Piping Tube Thicknesses

OD (in)	1/4	3/8	1/2	5/8	3/4	7/8	1-1/8	1-3/8	1-5/8
Material	Rigid Type “K” or “L” and Soft ACR Acceptable			Rigid Type “K” or “L” Only					
Min. Bend Radius (in)	.563	.9375	1.5	2.25	3.0	3.0	3.5	4.0	4.5
Min. Wall Thickness (in)	.03	.03	.035	.040	.042	.045	.050	.050	.050

Table 14: ACR Copper Tubing Dimensions and Physical Characteristics[1-4]

Nominal Pipe Outside Diameter (in)	**Actual Outside Diameter (in)**	**Drawn Temper**			**Annealed Temper**		
		Nominal Wall Thickness (in)	**Weight (lb/ft)**	**Cubic ft per Linear ft**	**Nominal Wall Thickness (in)**	**Weight (lb/ft)**	**Cubic ft per Linear ft**
1/4	0.250	--	--	--	0.030	0.081	.00020
3/8	0.375	0.030	0.126	.00054	0.032	0.134	.00053
1/2	0.500	0.035	0.198	.00101	0.032	0.182	.00103
5/8	0.625	0.040	0.285	.00162	0.035	0.251	.00168
3/4	0.750	0.042	0.362	.00242	0.042	0.362	.00242
7/8	0.875	0.045	0.455	.00336	0.045	0.455	.00336
1-1/8	1.125	0.050	0.655	.00573	0.050	0.655	.00573

[1]All dimensions provided are in accordance with ASTM B280 – Standard.

[2]Design pressure = 551 psig.

[3]ACR Tubing is available as hard drawn or annealed (soft) and are suitable for use with R410A refrigerant.

[4]The Copper Tube Handbook, 2010, Copper Development Association Inc., 260 Madison Avenue, New York, NY 10016.

Note:

• Commercially available piping often contains dust and other materials. Always blow it clean with a dry, inert gas.

• Prevent dust, water or other contaminants from entering the piping during installation. Contaminants can cause mechanical failure.

Due to our policy of continuous product innovation, some specifications may change without notification.
©LG Electronics U.S.A., Inc., Englewood Cliffs, NJ. All rights reserved. “LG” is a registered trademark of LG Corp.

No Pipe Size Substitutions

Note:

Use only the pipe size recommended by this installation manual. Using a different size is prohibited and may result in system malfunction or failure.

Copper Expansion and Contraction

Under normal operating conditions, the vapor pipe temperature of a Duct Free System can vary as much as 280°F. With this large variance in pipe temperature, the designer must consider pipe expansion and contraction to avoid pipe and fitting fatigue failures.

Refrigerant pipe along with the insulation jacket form a cohesive unit that expands and contracts together. During system operation, thermal heat transfer occurs between the pipe and the surrounding insulation.

If the pipe is mounted in free air space, no natural restriction to movement is present if mounting clamps are properly spaced and installed. When the refrigerant pipe is mounted underground in a utility duct stacked among other pipes, natural restriction to linear movement is present. In extreme cases, the restrictive force of surface friction between insulating jackets could become so great that natural expansion ceases and the pipe is "fixed" in place. In this situation, opposing force caused by change in refrigerant fluid/vapor temperature can lead to pipe/fitting stress failure.

The refrigerant pipe support system must be engineered to allow free expansion to occur. When a segment of pipe is mounted between two fixed points, provisions must be provided to allow pipe expansion to naturally occur. The most common method is the inclusion of expansion Loop or U-bends. Each segment of pipe has a natural fixed point where no movement occurs. This fixed point is located at the center point of the segment assuming the entire pipe is insulated in a similar fashion. The natural fixed point of the pipe segment is typically where the expansion Loop or U-bend should be.

Linear pipe expansion can be calculated using the following formula:

$$LE = C \times L \times (T_r - T_a) \times 12$$

LE	=	Anticipated linear tubing expansion (in.)
C	=	Constant (For copper = 9.2×10^{-6} in./in.°F)
L	=	Length of pipe (ft.)
T_R	=	Refrigerant pipe temperature (°F)
T_a	=	Ambient air temperature (°F)
12	=	Inches to feet conversion (12 in./ft.)

1. In Table 15 find the row corresponding with the actual length of the straight pipe segment.
2. Estimate the minimum and maximum temperature of the pipe. In the column showing the minimum pipe temperature, look up the anticipated expansion distance. Do the same for the maximum pipe temperature.
3. Calculate the difference in the two expansion distance values. The result will be the anticipated change in pipe length.

Example:

A system is installed and the design shows that there is a 100 foot straight segment of tubing between an indoor unit and the outdoor unit. In heating, this pipe transports hot gas vapor to the indoor units at 120°F. In cooling, the same tube is a suction line returning refrigerant vapor to the outdoor unit at 40°F. Look up the copper tubing expansion at each temperature and calculate the difference.

Vapor Line

Transporting Hot Vapor: 100 ft. pipe at 120 °F = 1.40 in.

Transporting Suction Vapor: 100 ft. pipe at 40 °F = 0.40 in.

Anticipated Change in Length: 1.40 in. – 0.40 in. = 1.00 in.

Liquid Line

The liquid temperature remains relatively the same temperature; only the direction of flow will reverse. No significant change in length of the liquid line, therefore, is anticipated.

When creating an expansion joint, the joint height should be a minimum of two times the joint width. Although different types of expansion arrangements are available, the data for correctly sizing an Expansion Loop is provided in Table 16. Use soft copper with long radius bends on longer runs or long radius elbows for shorter pipe segments. Using the anticipated linear expansion (LE) distance calculated, look up the Expansion Loop or U-bend minimum design dimensions. If other types of expansion joints are chosen, design per ASTM B-88 Standards.

Due to our policy of continuous product innovation, some specifications may change without notification.
©LG Electronics U.S.A., Inc., Englewood Cliffs, NJ. All rights reserved. "LG" is a registered trademark of LG Corp.

GENERAL INSTALLATION GUIDELINES

Refrigerant Piping

See table below for precalculated anticipated expansion for various pipe sizes and lengths of refrigerant tubing.

To find the anticipated expansion value:

1. From the table below, find the row corresponding with the actual feet of the straight pipe segment.
2. Estimate the minimum and maximum temperature of the pipe.
3. In the column showing the minimum pipe temperature, look up the anticipated expansion distance corresponding to the segment length. Do the same for the maximum pipe temperature.
4. Calculate the difference in the two expansion distance values. The result will be the change in pipe length.

Table 15: Linear Thermal Expansion of Copper Tubing in Inches

Pipe Length[1]	Fluid Temperature °F																			
	35°	40°	45°	50°	55°	60°	65°	70°	75°	80°	85°	90°	95°	100°	105°	110°	115°	120°	125°	130°
10	0.04	0.04	0.05	0.06	0.06	0.07	0.08	0.08	0.09	0.09	0.10	0.10	0.11	0.11	0.11	0.12	0.13	0.14	0.15	0.15
20	0.08	0.08	0.10	0.12	0.13	0.14	0.15	0.16	0.17	0.18	0.19	0.20	0.21	0.22	0.22	0.23	0.26	0.28	0.29	0.30
30	0.12	0.12	0.15	0.18	0.20	0.21	0.23	0.24	0.26	0.27	0.29	0.30	0.32	0.33	0.32	0.35	0.39	0.42	0.44	0.45
40	0.16	0.16	0.20	0.24	0.26	0.28	0.30	0.32	0.34	0.36	0.38	0.40	0.42	0.44	0.43	0.46	0.52	0.56	0.58	0.60
50	0.20	0.20	0.25	0.30	0.33	0.35	0.38	0.40	0.43	0.45	0.48	0.50	0.53	0.55	0.54	0.58	0.65	0.70	0.73	0.75
60	0.24	0.24	0.30	0.36	0.39	0.42	0.45	0.48	0.51	0.54	0.57	0.60	0.63	0.66	0.65	0.69	0.78	0.84	0.87	0.90

[1]Pipe length baseline temperature = 0°F. "Expansion of Carbon, Copper and Stainless Steel Pipe," *The Engineers' Toolbox*, www.engineeringtoolbox.com.

Figure 18: Coiled Expansion Loops and Offsets

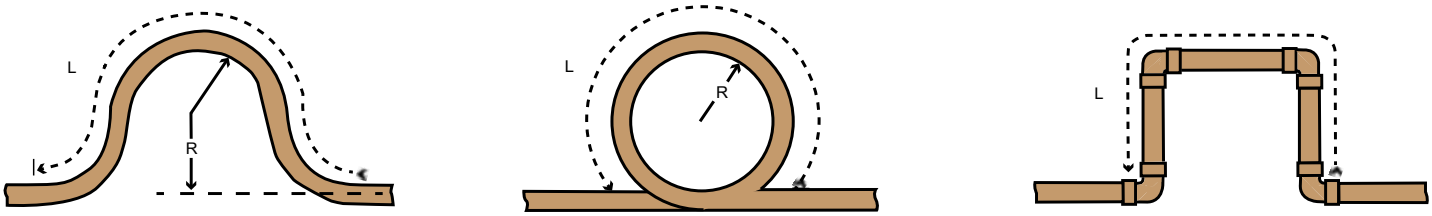

Large Tubing U-bend (>3/4 in.) Loop Small Tubing U-bend (<3/4 in.)

Table 16: Radii of Coiled Expansion Loops and Developed Lengths of Expansion Offsets

Anticipated Linear Expansion (LE) (inches)		Nominal Tube Size (OD) inches			
		1/4	3/8	1/2	3/4
1/2	R[1]	6	7	8	9
	L[2]	38	44	50	59
1	R[1]	9	10	11	13
	L[2]	54	63	70	83
1-1/2	R[1]	11	12	14	16
	L[2]	66	77	86	101
2	R[1]	12	14	16	19
	L[2]	77	89	99	117
2-1/2	R[1]	14	16	18	21
	L[2]	86	99	111	131
3	R[1]	15	17	19	23
	L[2]	94	109	122	143
3-1/2	R[1]	16	19	21	25
	L[2]	102	117	131	155
4	R[1]	17	20	22	26
	L[2]	109	126	140	166

Due to our policy of continuous product innovation, some specifications may change without notification.
©LG Electronics U.S.A., Inc., Englewood Cliffs, NJ. All rights reserved. "LG" is a registered trademark of LG Corp.

Inserts and Pipe Supports

Inserts

An insert can be installed into a floor or beam before the concrete sets so that fittings such as ducts, pipes, or suspension bolts can be added at a later time. Decide where the inserts should be placed before support installation.

Figure 19: Installing an Insert Into a Concrete Beam.

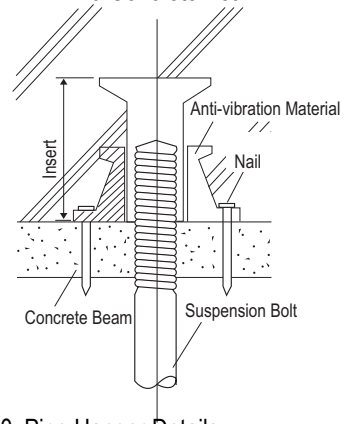

Pipe Supports

Note:

The pipe system must be adequately supported to avoid pipe sagging. Sagging pipes become oil traps that lead to equipment malfunction.

Pipe supports should never touch the pipe wall; supports should be installed outside (around) the primary pipe insulation jacket. Insulate the pipe before installing the supports. Pipe supports are field-provided and must meet local code. If local codes do not specify pipe support spacing, install pipe supports a maximum of five (5) feet on center for straight segments of pipe up to 3/4" outside diameter size.

Wherever the pipe changes direction, place a hanger within twelve (12) inches on one side and within twelve to nineteen (12 to 19) inches of the bend on the other side. Support piping at indoor units as shown. Support Y-Branch fittings as shown.

Figure 20: Pipe Hanger Details.

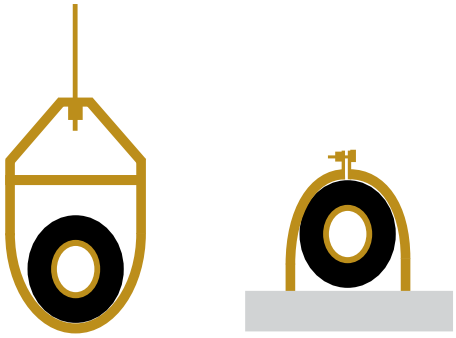

Figure 21: Typical Pipe Support Location—Change in Pipe Direction.

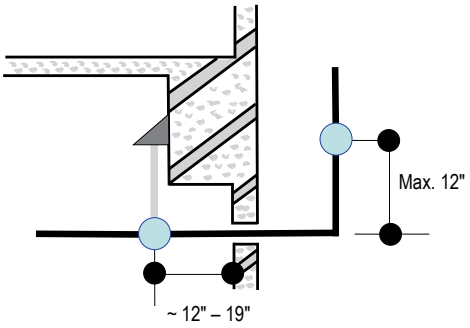

Figure 22: Pipe Support at Indoor Unit.

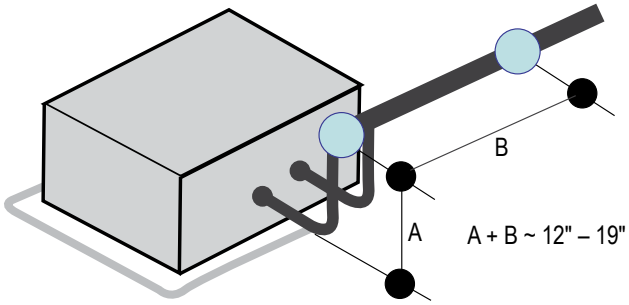

Figure 23: Pipe Support at Y-branch Fitting.

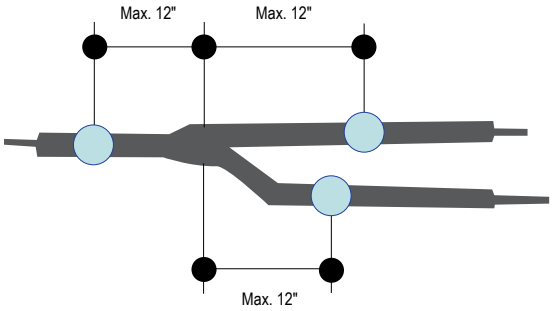

Due to our policy of continuous product innovation, some specifications may change without notification.
©LG Electronics U.S.A., Inc., Englewood Cliffs, NJ. All rights reserved. "LG" is a registered trademark of LG Corp.

Examples of Supports

Figure 24: U-Bolt Support with Insulation.

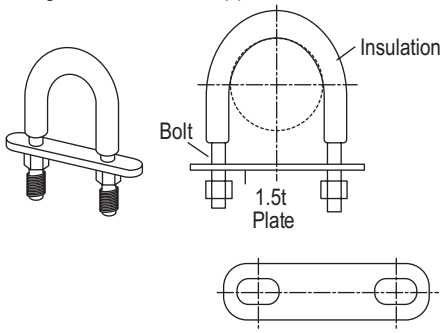

Figure 25: O-Ring Support with Insulation.

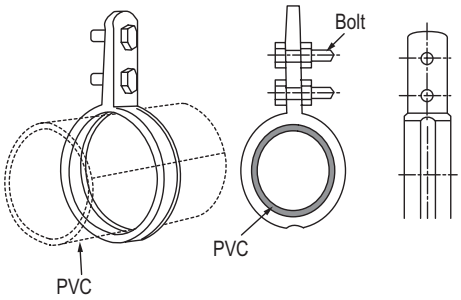

Figure 26: Saddle-Type Support.

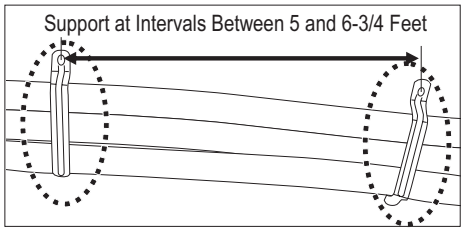

Note:

Do not compress the insulation with the saddle-type support. If the insulation is compressed, it may tear open and allow condensation to generate during product operation.

Figure 27: U-Bolt Support with an Insulated Pipe.

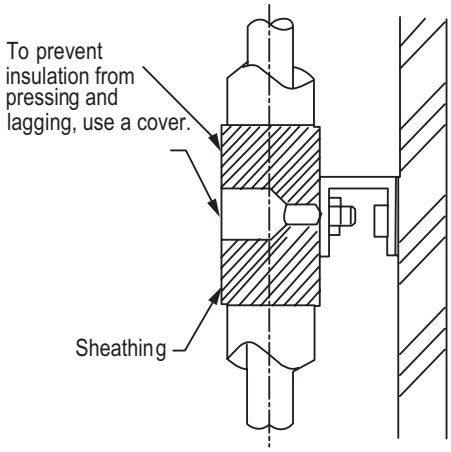

Figure 28: O-Ring Band Support with an Insulated Pipe.

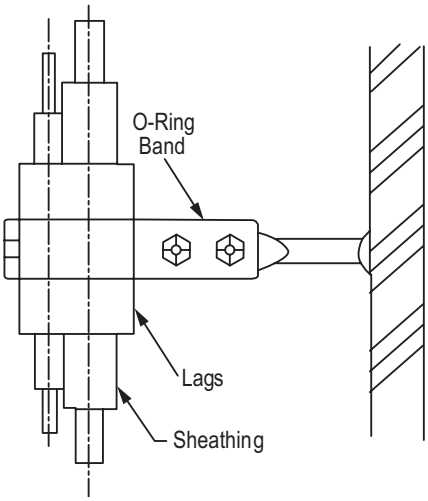

Figure 29: One-Point Down-Stop Support (>441 lbs.).

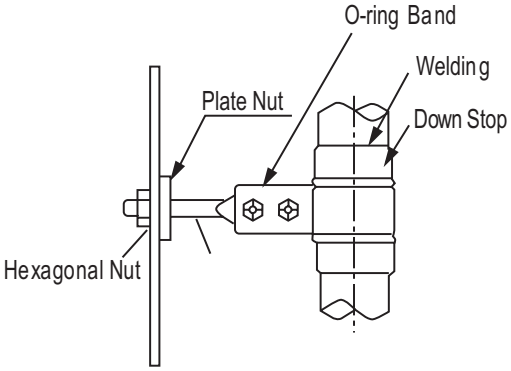

Figure 30: Two-Point Down-Stop Support.

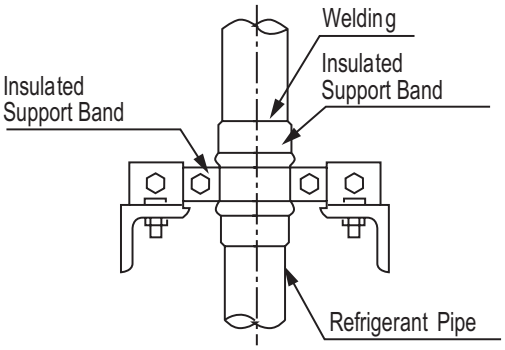

Due to our policy of continuous product innovation, some specifications may change without notification.
©LG Electronics U.S.A., Inc., Englewood Cliffs, NJ. All rights reserved. "LG" is a registered trademark of LG Corp.

Pipe Sleeves at Penetrations

LG requires that all pipe penetrations through walls, floors, and pipes buried underground be routed through a properly insulated sleeve that is sufficiently sized to provide free movement of the pipe and does not compress the insulation. Route underground refrigerant pipe inside a protective sleeve to prevent insulation deterioration. Follow federal, state, and local regulations and codes when choosing a sleeve type.

Note:

Pipe diameter plus insulation thickness determines wall penetration diameter.

For example:

Diameter of Gas Piping:	1/2"
Diameter of Liquid Piping:	1/4"
Thickness of Gas Piping Insulation:	0.4" x 2
Thickness of Liquid Piping Insulation:	0.4" x 2
Surplus:	0.8"
Sleeve diameter (total):	3.1" minimum

Figure 31: Pipe Sleeve Options.

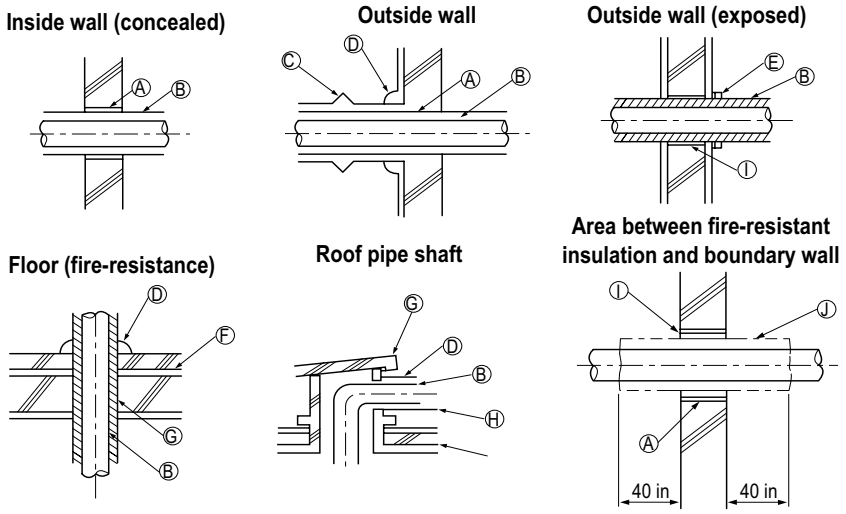

Ⓐ Sleeve
Ⓑ Insulation
Ⓒ Lagging
Ⓓ Caulk
Ⓔ Band
Ⓕ Water-resistant layer
Ⓖ Sleeve with edge
Ⓗ Lagging
Ⓘ Mortar or other fire-resistant caulk
Ⓙ Fire-resistant insulation

When filling an access hole with mortar, cover the area with steel plate so that the insulation will not fall through. For this area, use fire-resistant materials for both the insulation and cover. (Vinyl cover should not be used.)

Underground Refrigerant Piping

Route refrigerant pipe installed underground inside a vapor tight protective sleeve to prevent insulation deterioration and water infiltration. Refrigerant pipe installed inside underground casing must be continuous without any joints. Underground refrigerant pipe must be located at a level below the frost line.

Table 17: Utility Conduit Sizes.

Liquid Pipe[1]	Vapor Pipe[1]			
	3/8 (1-1/8[2,3])	1/2 (2.0[2,5])	5/8 (2-1/8[2,5])	3/4 (2-1/4[2,5])
1/4 (1.0)[3]	4	4	4	4
3/8 (1-1/8)[3]	4	4	4	5

[1]OD pipe diameter in inches; Values in parenthesis () indicate OD of pipe with insulation jacket.

[2]Diameter of pipe with insulation. Thickness of pipe insulation is typical. Actual required thickness may vary based on surrounding ambient conditions and should be calculated and specified by the design engineer.

[3]Insulation thickness (value in parenthesis) = 3/8 inch.

[4]Insulation thickness (value in parenthesis) = 1 inch.

[5]Insulation thickness (value in parenthesis) = 3/4 inch.

Figure 32: Typical Arrangement of Refrigerant Pipe and Cable(s) in a Utility Conduit.

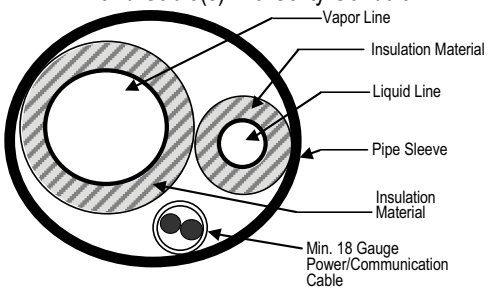

Figure 33: Underground Refrigerant Piping.

Due to our policy of continuous product innovation, some specifications may change without notification.
©LG Electronics U.S.A., Inc., Englewood Cliffs, NJ. All rights reserved. "LG" is a registered trademark of LG Corp.

Piping Materials and Handling

Pipes used for the refrigerant piping system must include the specified thickness, and the interior must be clean.

While handling and storing, do not bend or damage the pipes, and take care not to contaminate the interior with dust, moisture, etc. See Table 18 for care of piping.

Figure 34: Keep Piping Capped While Storing

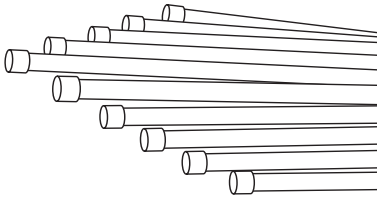

Table 18: Three Principles of Refrigerant Piping.

	Dry	Clean	Airtight
Principles	No moisture should be inside the piping.	No dust should be inside the piping.	No leaks should occur.
	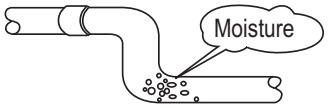		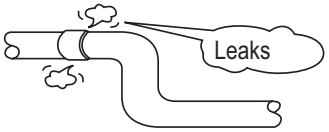
Problems Caused	- Significant hydrolysis of refrigerant oil. - Refrigerant oil degradation. - Poor insulation of the compressor. - System does not operate properly. - EEVs, capillary tubes are clogged.	- Refrigerant oil degradation. - Poor insulation of the compressor. - System does not operate properly. - EEVs and capillary tubes become clogged.	- Refrigerant gas leaks / shortages. - Refrigerant oil degradation. - Poor insulation of the compressor. - System does not operate properly.
Solutions	- Remove moisture from the piping. - Piping ends should remain capped until connections are complete. - Do not install piping on a rainy day. - Connect piping properly at the unit's side. - Remove caps only after the piping is cut, the burrs are removed, and after passing the piping through the walls. - Evacuate system to a minimum of 500 microns and ensure the vacuum holds at that level for 24 hours	- Remove dust from the piping. - Piping ends should remain capped until connections are complete. - Connect piping properly at the side of the unit. - Remove caps only after the piping is cut and burrs are removed. - Retain the cap on the piping when passing it through walls, etc.	- Test system for air tightness. - Perform brazing procedures that comply with all applicable standards. - Perform flaring procedures that comply with all applicable standards. - Perform flanging procedures that comply with all applicable standards. - Ensure that refrigerant lines are pressure tested to 550 psig.

Due to our policy of continuous product innovation, some specifications may change without notification.
©LG Electronics U.S.A., Inc., Englewood Cliffs, NJ. All rights reserved. "LG" is a registered trademark of LG Corp.

Piping Preparation

⚠WARNING

- ⃠ *Do not allow the refrigerant to leak during brazing; if refrigerant combusts, it generates a toxic gas which can cause physical injury or death.*
- ⃠ *Do not braze in an enclosed location, and always test for gas leaks before / after brazing. Gas leaks can cause physical injury or death.*
- *After brazing, check for refrigerant gas leaks. Refrigerant gas leaks can cause physical injury or death.*
- *When selecting flare fittings, always use a 45° fitting rated for use with high pressure refrigerant R410A. Failure to do so may result in refrigerant leaks which in turn could result in personal injuries or death from oxygen depletion. Selected fittings must also comply with local, state, or federal standards.*

Note:

1. If piping becomes kinked due to excessive bending, do not use the pipe.
2. Braze the pipes to the service valve pipe stub of the outdoor unit.

Creating a Flare Fitting

Note:

One of the main causes of refrigerant leaks is defective flared connections. Be sure to properly form the flare connections.

1. Cut the pipe to length.
   - Measure the distance between the indoor unit and the outdoor unit.
   - Cut the pipes a little longer than measured distance.
   - Cut the cable 4.9 ft longer than the pipe length.

2A. Remove the burrs.
   - Completely remove all burrs from pipe ends.
   - When removing burrs, point the end of the copper pipe down to avoid introducing foreign materials in the pipe.

2B. Slide the flare nut onto the copper tube.

3. Flaring the pipe end.
   - Use the proper size flaring tool to finish flared connections as shown.
   - Refer to the diagram in step 3 of Figure 35 and the dimensions in Table 19 for positioning the pipe in the flaring tool.
   - ALWAYS create a 45° flare when working with R410A. See Warning on this page.

4. Carefully inspect the flared pipe end.
   - Compare the flare with the illustration in step 4 of Figure 35.
   - If the flare is defective, cut it off and re-do procedure.
   - If flare looks good, blow clean the pipe with dry nitrogen.

Figure 35: Creating a Flare Fitting.

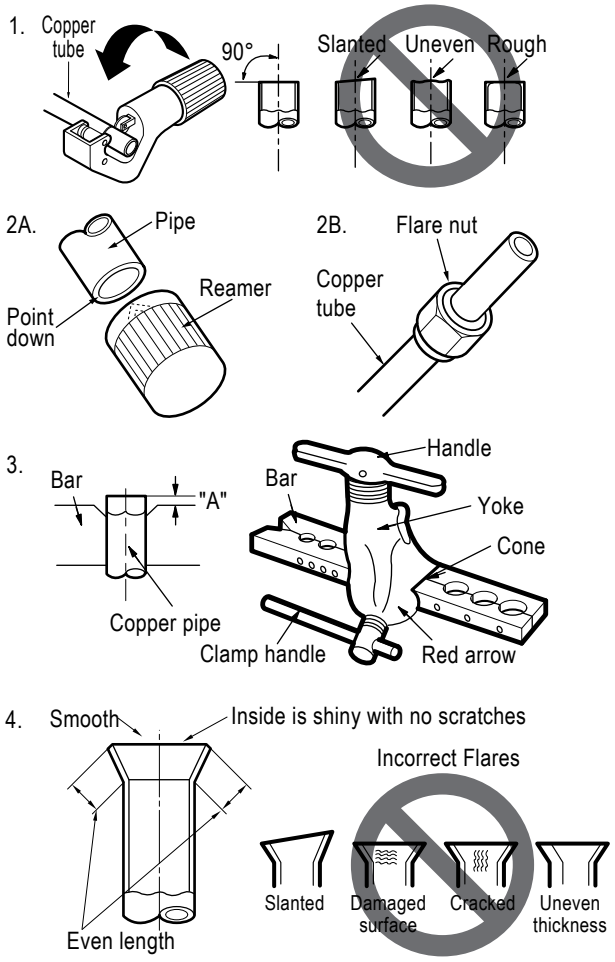

Table 19: Flare "A" Measurement.

Pipe Outside Diameter (inch)	"A" Measurement (inch)
1/4	0.04 – 0.5
3/8	0.06 – 0.7
1/2	0.06 – 0.7
5/8	0.06 – 0.7
3/4	0.07 – 0.8

Due to our policy of continuous product innovation, some specifications may change without notification.
©LG Electronics U.S.A., Inc., Englewood Cliffs, NJ. All rights reserved. "LG" is a registered trademark of LG Corp.

Multi F Outdoor Unit to Indoor Unit Piping Connections

Avoid Pipe Damage

- *When routing field-provided piping, avoid damaging the outdoor unit from excessive vibration.*
- *Correctly route the piping so it does not make contact with mounting bolts. Allow room for field installation.*
- *Properly insulate the liquid and gas lines separately up to the point of connection at the unit frame.*
- *See table below for Multi F outdoor unit connection types.*

Table 20: Outdoor Unit Piping Connections.

Outdoor Unit Piping Connections	LMU18CHV	LMU24CHV	LMU30CHV	LMU36CHV
Liquid Line Connection (in., OD) x Qty.	1/4 x 2	1/4 x 3	1/4 x 3	1/4 x 4
Vapor Line Connection (in., OD) x Qty.	3/8 x 2	3/8 x 3	3/8 x 3	3/8 x 4

Table 21: Indoor Unit Pipe Sizes.

Indoor Unit Capacity	Vapor Line Size (in., OD)	Liquid Line Size (in., OD)
9,000 Btu/h	Ø3/8	Ø1/4
12,000 Btu/h		
18,000 Btu/h	Ø1/2	

Table 22: Indoor Unit Piping Connections.

Indoor Unit Capacity	Vapor Line Connection (in., OD)	Liquid Line Connection (in., OD)
9,000 Btu/h	Ø3/8	Ø1/4
12,000 Btu/h		
18,000 Btu/h	Ø5/8	Ø3/8

Figure 36: Multi F Refrigerant Pipe Connections (LMU36CHV shown as example).

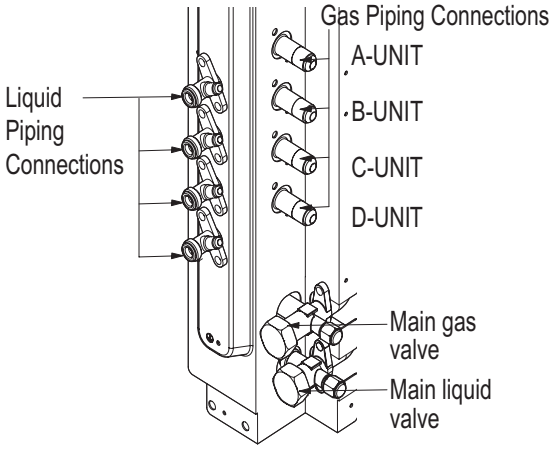

Connection sockets (included as a factory-supplied accessory with the indoor units) may need to be used when piping the indoor units to the outdoor unit.

Figure 37: Connection Socket Diagram.

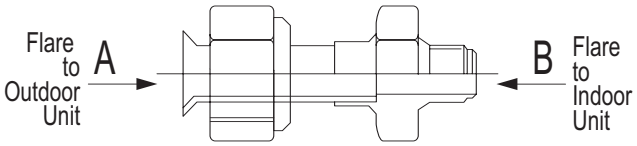

Table 23: Connection Socket Dimensions.

Indoor Unit Capacity	Vapor (in., OD)		Liquid (in., OD)	
	A	B	A	B
18,000 Btu/h	Ø3/8 → Ø1/2, Ø1/2 → Ø5/8		Ø1/4 → Ø3/8	

Figure 38: Performing Connections.

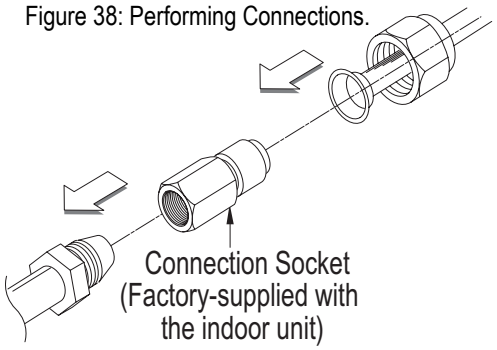

Using the Connection Socket

1. Align the center of the piping sections and tighten the flare nut by hand.
2. Tighten the flare nut with a torque wrench, using the arrows on the wrench as a guide, until a click is heard.

Due to our policy of continuous product innovation, some specifications may change without notification.
©LG Electronics U.S.A., Inc., Englewood Cliffs, NJ. All rights reserved. "LG" is a registered trademark of LG Corp.

Multi F System Piping Connections

Note:

⃠ Do not use polyolyester (POE) or any other type of mineral oil as a thread lubricant. These lubricants are not compatible with PVE oil used in this system and create oil sludge leading to equipment damage and system malfunction.

1. When connecting the flare nuts, coat the flare (inside and outside) with polyvinyl ether (PVE) refrigeration oil only.
2. Align the center of the piping sections and tighten the flare nut by hand.
3. Tighten the flare nut with a torque wrench and a backup wrench until a click is heard.
4. Wrap insulation around the connection.
5. If it is necessary to loosen the flare nuts, always use two wrenches to do so.

Figure 40: Tightening the Flare Nuts.

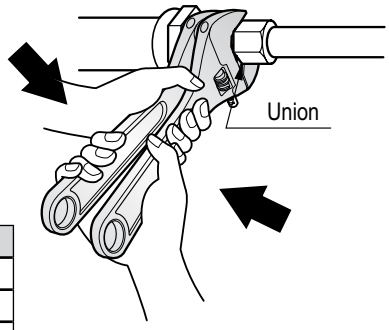

Table 24: Tightening Torque for Flare Nuts.

Pipe size (Inches O.D.)	Tightening torque (ft-lbs)	Width of the flare (A [inches])
1/4Ø	13.9 - 18	1/8
3/8Ø	24.5 - 30.3	1/8
1/2Ø	39.7 - 47.7	1/8
5/8Ø	45.5 - 59.2	1/16

Figure 39: Possible Outdoor Unit or Branch Distribution Unit (Multi F MAX only) to Indoor Unit Connections.

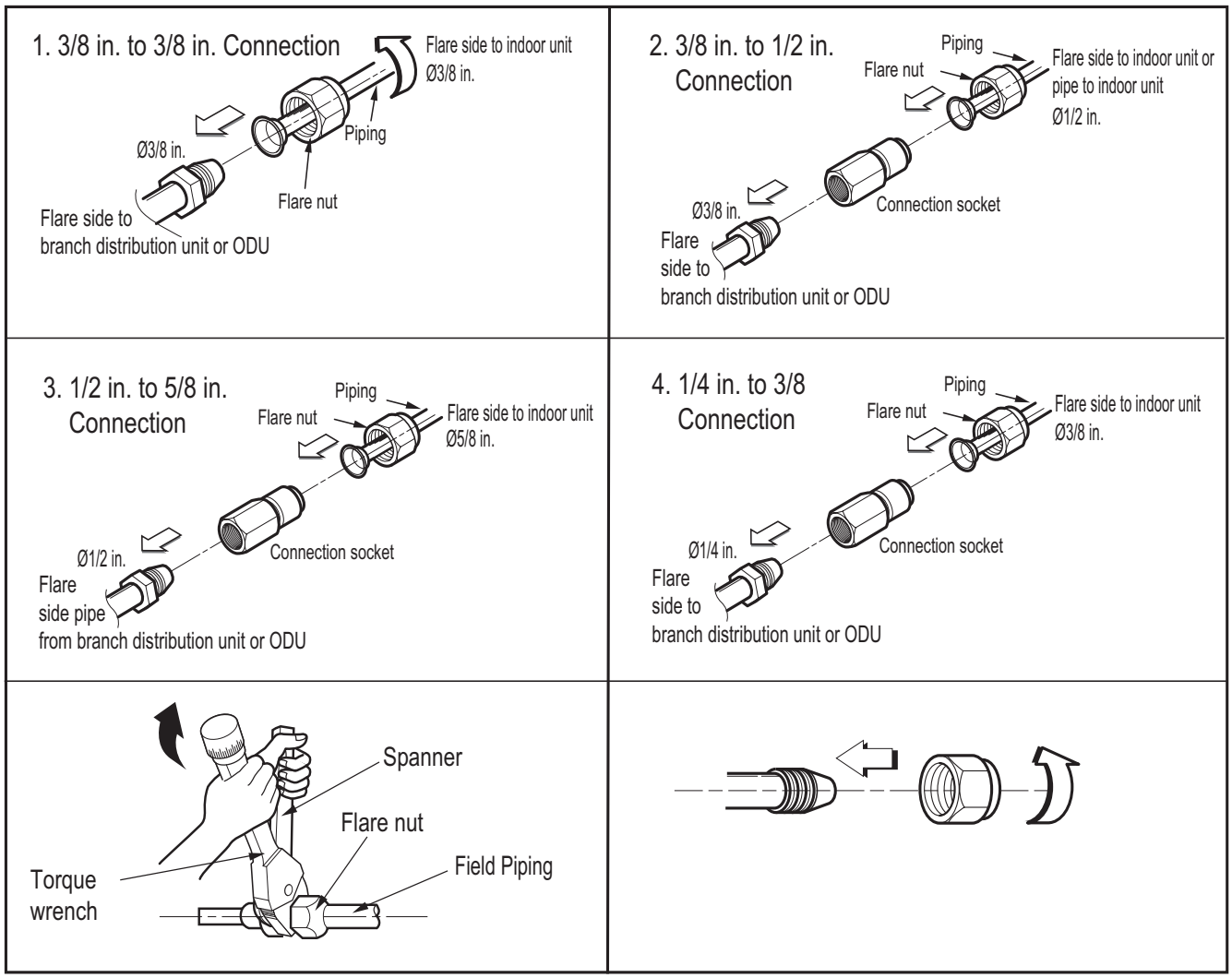

Due to our policy of continuous product innovation, some specifications may change without notification.
©LG Electronics U.S.A., Inc., Englewood Cliffs, NJ. All rights reserved. "LG" is a registered trademark of LG Corp.

Refrigerant Safety

⚠ WARNING

Verify the maximum refrigerant concentration level in the space where the indoor unit will be mounted meets the concentration limit for the application.

ASHRAE Standards 15-2010 and 34-2010 offer guidelines that address refrigerant safety and the maximum allowable concentration of refrigerant in an occupied space. Refrigerant will dissipate into the atmosphere, but a certain volume of air is required for this to occur safely. For R410A refrigerant, the maximum allowable concentration of refrigerant is twenty-six (26) lbs. per 1,000 cubic feet of an occupied space. Buildings with twenty-four (24) hour occupancy allow half of that concentration.[1]

ASHRAE Standards 15 and 34 assume that if a system develops a leak, its entire refrigerant charge will dump into the area where the leak occurs. To meet ASHRAE Standards 15 and 34, calculate the refrigerant concentration that may occur in the smallest room volume on the system, and compare the results to the maximum allowable concentration number.[1] Also consult state and local codes in regards to refrigerant safety.

[1]Information about ASHRAE Standard 15-2010/34-2010 and addenda current as of the date of this publication.

Brazing

Note:

It is imperative to keep the piping system free of contaminants and debris such as copper burrs, slag, or carbon dust during installation.

1. All joints are brazed in the field. Multi F refrigeration system components contain very small capillary tubes, small orifices, electronic expansion valves, oil separators, and heat exchangers that can easily become blocked. Proper system operation depends on the installer using best practices and utmost care while assembling the piping system.
   - Store pipe stock in a dry place and keep stored pipe capped and clean.
   - Purge all pipe sections clean with dry nitrogen prior to assembly.
2. Proper system operation depends on the installer using best practices and the utmost care while assembling the piping system.
   - Use adapters to assemble different sizes of pipe.
   - Always use a non-oxidizing material for brazing. ⃠ Do not use flux, soft solder, or anti-oxidant agents. If the proper material is not used, oxidized film may accumulate and clog or damage the compressors. Flux can harm the copper piping or refrigerant oil.
   - Use a tubing cutter. ⃠ Do not use a saw to cut pipe. De-bur and clean all cuts before assembly.
3. Brazing joints:
   - Use a dry nitrogen purge operating at a minimum pressure of three (3) psig and maintain a steady flow.
   - Use a 15% silver phosphorous copper brazing alloy to avoid overheating and produce good flow.
   - Protect isolation valves, electronic expansion valves, and other heat-sensitive control components from excessive heat with a wet rag or heat barrier spray.

Figure 41: Using Nitrogen Gas During Brazing

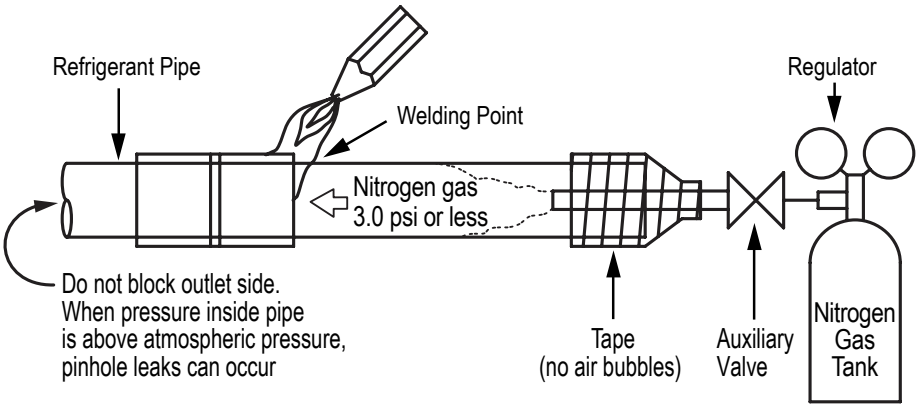

Due to our policy of continuous product innovation, some specifications may change without notification.
©LG Electronics U.S.A., Inc., Englewood Cliffs, NJ. All rights reserved. "LG" is a registered trademark of LG Corp.

Connecting the Indoor Unit Piping to the Field-Installed Piping

1. Center align the indoor unit piping (refrigerant and drain) and the field-installed piping, then hand tighten the flare nut.
2. Tighten the flare nut with a torque wrench.
3. Attach the drain tube piping to the indoor unit drain hose as shown.

Figure 42: Indoor Unit to Field-Installed Piping Connection.

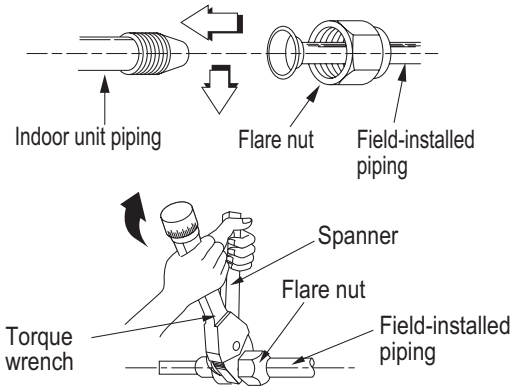

Figure 43: Extending the Drain Hose.

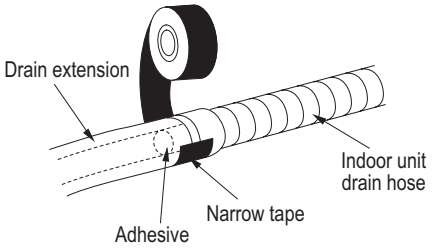

Note:

If the drain hose is routed inside a room, add insulation to prevent condensation from forming.

Refrigerant Piping System Insulation

All refrigerant piping including Y-branch connections, field-provided isolation ball valves, service valves, and elbows must be completely insulated using closed cell pipe insulation (up to the indoor unit piping connections). To prevent heat loss/heat gain through the refrigerant piping, all refrigerant piping including liquid lines and vapor lines must be insulated separately. Insulation must be a minimum 1/2" thick, and thickness may need to be increased based on ambient conditions and local codes. Insulation for field-installed refrigerant piping must have a minimum heat resistance of 248°F. Table 25 lists minimum wall thickness requirements for Ethylene Propylene Diene Methylene (EPDM) insulation.

Note:

Follow locals codes when selecting EPDM insulation wall thickness. Thickness in Table 25 is based on heat conductivity of 0.61 Btu/in/h/ft2/°F.

Table 25: Insulation Guidelines for Typical and Special Circumstances.

Classification		Air-conditioned location		Non-air conditioned location	
		1. Typical location	2. Special location	3. Typical location	4. Special location
Liquid pipe	ø1/4 inches	1/2 inches	1/2 inches	1/2 inches	1/2 inches
	ø3/8 inches				
	≥ø1/2 inches	1/2 inches	1/2 inches	1/2 inches	1/2 inches
Vapor pipe	ø3/8 inches	1/2 inches	3/4 inches	3/4 inches	1 inch
	ø1/2 inches				
	ø5/8 inches				
	ø3/4 inches				

1. Air-conditioned, Typical location
- When piping passes through an indoor area where the indoor unit operates, such as an apartment, classroom, office, mall, hospital, etc.

2. Air-conditioned, Special location
- When the location is air conditioned, but has severe temp/humidity difference due to high ceilings, such as a church, auditorium, theater, etc.
- When the location is air conditioned, but internal temperature/humidity are high, such as a bathroom, swimming pool, locker room, etc.

3. Non-air conditioned, Typical location
- When piping passes through an indoor area where the indoor unit does not operate, such as a hallway, dormitory, or school, etc.

4. Non-air conditioned, Special location (when both conditions listed below are present)
- When piping passes through an indoor area where the indoor unit does not operate.
- When the humidity is high and there is no air flow in the location where the piping is installed.

Due to our policy of continuous product innovation, some specifications may change without notification.
©LG Electronics U.S.A., Inc., Englewood Cliffs, NJ. All rights reserved. "LG" is a registered trademark of LG Corp.

Installing Refrigerant Piping Insulation

⚠WARNING

Ensure all refrigerant piping is insulated. Any exposed piping will cause burns if touched.

Wrap all refrigerant and condensate piping including field-provided isolation ball valves and flexible pipe connection kits provided by LG. All pipes must be insulated and each pipe must be separately wrapped. Any exposed piping may generate condensate; sufficiently insulate all cold surfaces to prevent moisture forming.

Ensure insulation material fits snugly against the refrigeration pipe with no air space between the pipe surface and the surrounding insulation.

Protect insulation inside hangers and supports with a second insulation layer. Ensure insulation on all pipe passing through pipe hangers, inside conduit, and/or sleeves is not compressed.

Glue all insulation joints with no air gaps. Be sure insulation material fits snugly against the refrigeration pipe with no air space between it and the pipe. All pipe insulation exposed to the sun and outdoor elements must be properly protected with PVC, aluminum vapor barrier, or alternatively placed in a weather-resistant enclosure such as a pipe rack with a top cover; and must meet local codes. Pay special attention to insulating the pipes installed in a ceiling plenum.

Figure 44: Typical Refrigerant Line Flare Fitting Insulation Detail.

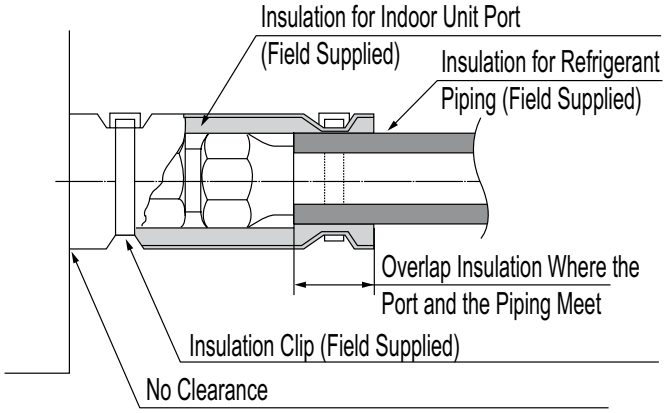

Figure 45: Insulating the Piping.

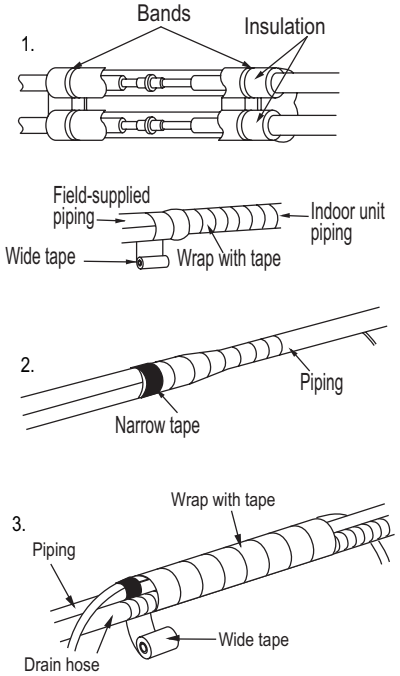

Due to our policy of continuous product innovation, some specifications may change without notification.
©LG Electronics U.S.A., Inc., Englewood Cliffs, NJ. All rights reserved. "LG" is a registered trademark of LG Corp.

Drain Piping

The standard wall-mounted indoor units have a factory-provided flexible pipe (13/16" O.D./ 5/8" I.D.) to drain condensate water. The flexible pipe connects to field-provided drain pipe. Use materials that comply with local codes for drain pipe and insulation.

1. Install the flexible drain pipe as straight as possible; sharp angles may cause the pipe to deteriorate and may crack over time.
2. Connect the flexible drain pipe with a round clamp. If the flexible drain pipe is not installed properly, water will leak from the connection.
3. ⃠ Do not include a reverse slope in the drain connection.

Figure 46: Flexible Drain Hose Connection.

Clamp the Flexible Drain Hose Connection

Figure 47: Indoor Unit with Gravity Drain.

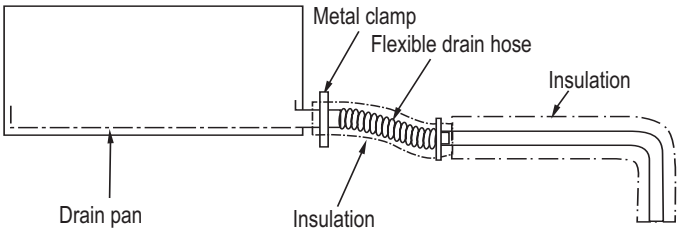

Drain Slope

Drain hose should point down so water can flow away easily. The gradient for drain piping should be at least 1/50 to 1/100. Ensure any holes through ceilings, walls, etc., are large enough to accommodate both the drain piping and any insulation.

Figure 48: Drain Piping Gradient Recommendation.

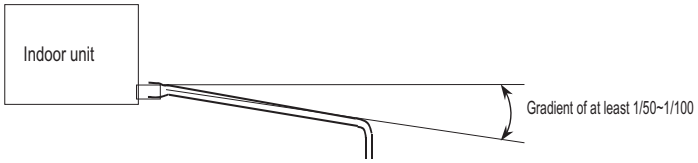

Drain Pipe Insulation

Drain piping must have insulation a minimum of 7/32 inches thick.

1. Overlap the insulation at the connection of the field-installed piping and the indoor unit piping. Tape together so that no gaps exist.
2. Secure insulation to the rear piping housing section with vinyl tape.
3. Bundle the piping and drain hose with tape where they meet at the back of the indoor unit frame. Position the drain hose at the bottom of the bundle (positioning the drain hose at the top of the bundle may cause the drain pan to overflow inside the indoor unit).

Checking the Drainage System

1. Pour water on the indoor unit evaporator. ⃠ Do not use any other liquid to test the drain.
2. Ensure the water flows through and out of the hose and away from the indoor unit without leaking.

Figure 49: Checking the Drainage System.

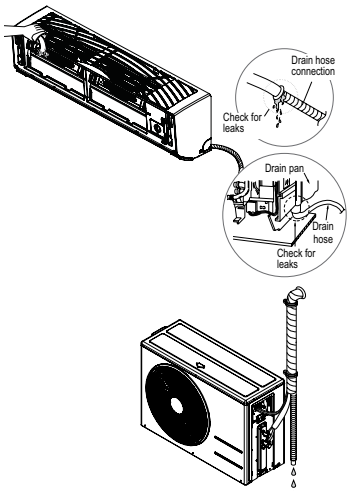

Due to our policy of continuous product innovation, some specifications may change without notification.
©LG Electronics U.S.A., Inc., Englewood Cliffs, NJ. All rights reserved. "LG" is a registered trademark of LG Corp.

ELECTRICAL WIRING

General Guidelines

⚠ WARNING

- *All power wiring and communication cable installation must be performed by trained service providers working in accordance with local, state, and National Electrical Code regulations related to electrical equipment and wiring, and following the instructions in this manual. Electric shock can cause physical injury or death.*
- *Undersized wiring may lead to unacceptable voltage at the unit and may cause a fire hazard.*
- *Properly ground the Multi Zone outdoor and indoor units. Ground wiring must always be installed by a trained technician Ground wiring is required to prevent accidental electrical shock during current leakage.*
- ⃠ *Do not connect ground wire to refrigerant, gas, sewage, or water piping; to lightning rods; to telephone ground wiring; or to the building plumbing system. Use clamps to prevent the wires from touching the piping. Failure to properly provide a National Electrical Code-approved earth ground can result in electric shock, fire, physical injury or death.*
- *Verify that the branch switch and circuit breaker are set to OFF before installing the wiring system. Electric shock can cause physical injury or death.*
- *Install appropriately sized breakers / fuses / overcurrent protection switches and wiring in accordance with local, state, and National Electrical Code regulations related to electrical equipment and wiring, and following the instructions in this manual. Using an oversized breaker or fuse may result in electric shock, physical injury or death.*

Note:

- *Consider ambient conditions (temperature, direct sunlight, inclement weather, etc.) when selecting, installing, and connecting the power wiring.*
- *Properly ground the Multi Zone outdoor and indoor unit. Improperly grounded wire can cause communication problems from electrical noise, and motor current leakage. Ground wiring must always be installed by a trained technician.*
- *If the system operates in reversed phase, it may damage the compressors and other components.*
- *If there is a possibility of reversed phase, phase loss, momentary blackout, or the power goes on and off while the system is operating, install a field-supplied phase loss protection circuit.*
- ⃠ *Do not connect ground wire to refrigerant, gas, or water piping; to lightning rods; to telephone ground wiring; or to the building plumbing system. Failure to properly provide a National Electrical Code-approved earth ground can result in property damage and equipment malfunction.*
- *Install appropriately sized breakers / fuses / overcurrent protection switches and wiring in accordance with local, state, and National Electrical Code regulations related to electrical equipment and wiring, and following the instructions in this manual. Using an oversized breaker or fuse may result in equipment malfunction and property damage.*
- *Use only copper wiring that is stranded and shielded with the wires separately insulated.*
- ⃠ *Do not use a multi-conductor cable with more than five (5) wires in one (1) core.*
- *Power wiring and communications cable sizes must comply with applicable federal UL / ETL, state, and local codes.*
- ⃠ *Do not operate the air conditioning system until the refrigerant piping installation is complete. Operating the system before refrigerant piping is finalized may damage the compressor.*
- *Install a ground wire for the outdoor units, indoor units, and branch distribution units.*
- *Install a main shutoff switch or circuit breaker that interrupts all power sources simultaneously (circuit breaker should be resistant to electromagnetic currents).*
- *Use ring terminals to attach the wiring. Verify that all power wiring and communications cable terminals are securely attached. Ensure enough slack is included in the wiring and cables to avoid damaging the connections.*
- *Use a conduit to protect the power wiring.*

Due to our policy of continuous product innovation, some specifications may change without notification.
©LG Electronics U.S.A., Inc., Englewood Cliffs, NJ. All rights reserved. "LG" is a registered trademark of LG Corp.

Line Voltage Wiring and Communications Cable Installation

For both Multi F and Multi F MAX systems, line voltage is wired to the outdoor unit only. The outdoor unit will supply power to the branch distribution units (Multi F MAX systems only) and the indoor units through the power wiring / communications cable.

Electrical Specifications

1. Multi F and Multi F MAX Outdoor Units: 1Ø, 208-230V, 60Hz
2. Indoor Units / Branch Distribution Units (Multi F MAX systems only): 1Ø, 208-230V, 60Hz from ODU (Indoor units draw minimal power.)
3. Select power supply wire type and size based on NEC and local codes. Maximum voltage fluctuation ±10% of the nameplate rated value.
4. Properly ground the outdoor unit per NEC and / or local code.
5. Use copper wiring that is solid or stranded; must comply with all local and national electrical codes.

Power Wiring / Communications Cable Specifications

- From Multi F Outdoor Units to Indoor Units = Min. 4 x 18AWG (Stranded, shielded or unshielded. If shielded, must be grounded to chassis at the outdoor unit only).
- From Multi F MAX Outdoor Units to Branch Distribution Units = Min. 4 x 18AWG (Stranded, shielded or unshielded. If shielded, must be grounded to chassis at the outdoor unit only).
- From Multi F MAX Branch Distribution Units to Indoor Units = Min. 4 x 18AWG (Stranded, shielded or unshielded. If shielded, must be grounded to chassis at the outdoor unit only). Maximum Allowable Temperature for Wiring: 194°F
- Indoor Unit(s) to Wired Controller: Three-core cable
- Multi F System Maximum Cable Length: 82 ft.
- Multi F MAX System Maximum Cable Length:
  - Outdoor Unit to Branch Distribution Unit(s): 180.4 ft.
  - Branch Distribution Unit(s) to Indoor Unit(s): 49.2 ft.

Figure 52: Power Wiring and Communications Cable from the Multi F ODU to the IDUs, or from the Multi F MAX ODU to the BDUs and from the BD Unit to the IDUs.

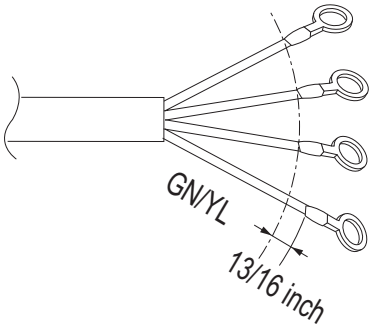

Figure 50: Close up of a Typical Ring Terminal

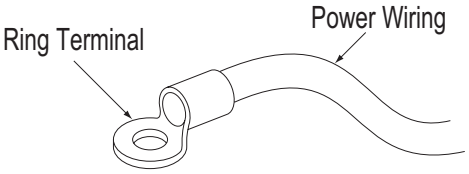

Figure 51: Proper and Improper Power Wiring Connections

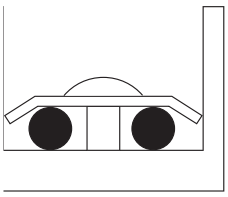

Terminate multiple power wires of the same gauge to both sides.

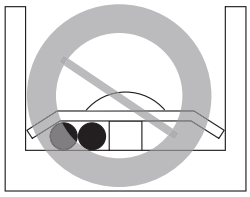

Do not terminate two wires on one side.

● :Copper Wire

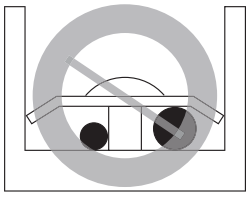

Do not terminate different gauge wires to a terminal block.

⚠ WARNING

• If power wires are not properly terminated and firmly attached, there is risk of fire, electric shock, and physical injury or death.

Note:

- ⃠ *Never apply line voltage power to the communications cable terminal block. If contact is made, the PCBs may be damaged.*
- *Always include some allowance in the wiring length when terminating. Provide some slack to facilitate removing the electrical panels while servicing.*
- ⃠ *Never ground the shield of the communications cable to the indoor unit frame or other grounded entities of the building. Ground the communications cable shield only at the outdoor unit. Improperly grounding this cable can cause communications errors.*

Due to our policy of continuous product innovation, some specifications may change without notification.
©LG Electronics U.S.A., Inc., Englewood Cliffs, NJ. All rights reserved. "LG" is a registered trademark of LG Corp.

ELECTRICAL WIRING

Power Wiring Specifications and Best Practices/Controller Options

MULTI F
MULTI F MAX

General Power / Communication Cable Specifications

- Use a four (4) conductor stranded, shielded or unshielded cable between the Multi Zone outdoor unit and the indoor units (if shielded, must be grounded to chassis at the outdoor unit only).
- Minimum 18 gauge shielded CVVS or CPEVS cable.
- Insulation material as required by local code.
- Rated for continuous exposure of temperatures up to 140°F.
- Maximum allowable cable length: 984 feet.
- Firmly attach the cable; provide slack but secure in a way to prevent external forces from being imparted on the terminal block.
- Wiring should be completed without splices.
- Terminate the cable shield to a grounded surface at the outdoor unit only.

Note:

- *Always verify the communication cable is connected to a communications terminal on the Multi Zone unit. Never apply line voltage power to the communication cable connection. If contact is made, the PCBs may be damaged.*
- *The shield of the communications cable connecting the outdoor unit to the indoor unit should be grounded only to the outdoor unit frame.*
- *Tie the shield of each cable segment together using a wire nut at each indoor unit. Maintain polarity throughout the communication network.*

Communication Cables Between the Wall Indoor Unit and the Central Controller

- Simple Controllers: field-provided, 18 gauge, stranded two-conductor communication cable (shielded).
- All other Central Controllers: field-provided, 18 gauge, stranded two-conductor communication cable (shielded).
- Insulation material as recommended by local code.
- Connect all central control devices such as ACP, BACnet® and LonWorks® gateways, and energy recovery ventilators all on the same cable. Order does not matter. Polarity does. Keep “A” terminals with “A” terminals, and “B” terminals with “B” terminals.
- Starting at the outdoor unit, terminate the cable on terminals Internet A and Internet B. Route the cable as needed between each device.

Controller Options

Refer to the table at right as to which remote controller model is used for each indoor unit. Once all wiring is connected to the indoor and outdoor units be sure to test the accompanying remote controllers for performance. As always, follow all safety warnings and notes when operating the units using the remote controller. Additionally, all of the Multi F/Multi F Max outdoor models can use the following controllers when accompanied with the PI 485 VNet Accessory:

- AC Smart
- ACP
- BACnet®
- LonWorks®
- LGMV

BACnet® is a registered trademark of ASHRAE. LonWorks® is a registered trademark of Echelon Corporation.

Table 26: IDU Models and Associated Wireless Controller Model

Multi Zone IDU Model	Wireless Controller Model
LAN090-120-180HSV4	AKB73835317

Due to our policy of continuous product innovation, some specifications may change without notification.
©LG Electronics U.S.A., Inc., Englewood Cliffs, NJ. All rights reserved. “LG” is a registered trademark of LG Corp.

ELECTRICAL WIRING

Indoor Unit Electrical Connections Guidelines

Power Wiring / Communications Cable Guidelines

- These instructions are for the indoor unit only. For outdoor unit wiring, refer to the outdoor unit installation manual.
- Confirm power source specifications.
- Confirm that the electrical capacity is sufficient.
- Starting current must be maintained ±10 percent of the rated current marked on the outdoor unit name plate.
- Confirm cable thickness specifications.
- It is recommended that a circuit breaker is installed, especially if conditions could become wet or moist.
- Include a disconnect in the power wiring system. Add an air gap contact separation of at least 1/8 inch in each active (phase) conductor.
- A voltage drop may cause the following problems:
  1. Magnetic switch vibration, fuse breaks, or disturbance to the normal function of an overload protection device.
  2. Compressor will not receive the proper starting current.

The general guidelines for connecting electrical and communication cables are similar for all wall-mounted indoor units; however, the connections on the terminal block may differ. Depending on your indoor unit, the location of the terminal block on the indoor unit might vary from these typical images. Figure 53 shows typical connections.

The electrical connections procedure includes wiring diagrams for each type of standard wall-mounted indoor unit.

Figure 53: Typical IDU Power and Communications Cable Connections

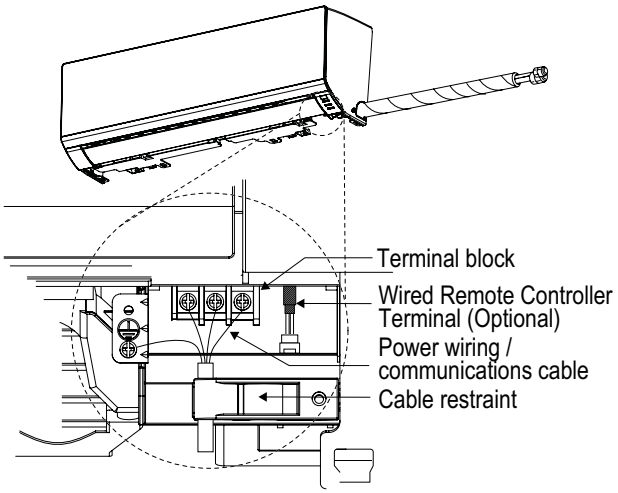

IDU Electrical Connections Procedure

⚠ WARNING

- *Be sure that main power to the unit is completely off before beginning this procedure. Electric shock can cause severe physical injury or death.*
- *Follow all safety and warning information outlined at the beginning and throughout this manual. Failure to do so may cause bodily injury or death.*

Note:

- *Follow all safety and warning information outlined at the beginning and throughout this manual. Failure to do so, may cause unit failure.*
- *Some units might require you to remove the Control Cover from the terminal block area. Most Control Covers are attached with a phillips screw head.*
- *Connect the electrical cable to the indoor unit by connecting the wires to the terminals on the control board individually according to the outdoor unit connection. Be sure that the color of the wires at the outdoor unit along with the terminal numbers are the same as those for the indoor unit.*
- *Loose wiring may cause unit malfunction, or the terminal to overheat and catch fire. Terminal screws may become loose during transport. Properly tighten the terminal connections during installation.*

Due to our policy of continuous product innovation, some specifications may change without notification.
©LG Electronics U.S.A., Inc., Englewood Cliffs, NJ. All rights reserved. "LG" is a registered trademark of LG Corp.

ELECTRICAL WIRING

Indoor Unit Electrical Connections Procedure

⚠ WARNING

Be sure there is no power input to the system before proceeding with these connections. There is risk of electrical shock resulting in serious bodily injury or death.

1. At the bottom panel of the indoor unit, unsnap the latches covering the phillips head screws as shown in Figure 54.
   - Normally, there are three (3) screws on the panel, however, your indoor unit model may differ.
2. Using a phillips head screwdriver, remove the screws from the bottom panel of the indoor unit and set aside (Figure 55).
3. Remove the bottom panel (Figure 56).
   - Removal is necessary to gain access to the terminal block located at the bottom of most indoor units.
4. Route the electrical/communications wiring through the back / bottom of the indoor unit (through a knockout panel, Figure 57).
5. Using a screwdriver, connect the wires as shown in Figure 58 and Figure 59. Also refer to the appropriate wiring diagram for the IDU (Figure 60 and Figure 61).
   - Each wire should be securely attached to the terminal block.
   - Ensure the green/yellow ground cable is securely connected to the correct screw terminal.
6. When done, reattach the bottom panel to the indoor unit, being careful to align panel using the rear tabs.

• *You might need to give the panel a gentle tap with the palm of your hand to be sure it engages at the bottom.*

7. Using a phillips screwdriver, reattach the screws to the bottom panel and secure.
8. Once screws are in place, re-snap the latches over the screws.
9. If all other piping and electrical wiring to the outdoor unit has been completed, you can turn the system on to test.
   - If you have not completed the piping connections, do not turn power on at this time. Be sure to complete all other piping, (along with drain hose) and wiring to the system.

Figure 54: Latch over Screws on Bottom Panel, Indoor Unit

Figure 55: Remove Screws from Bottom Panel

Figure 56: Removal (and Reattachment) of Bottom Panel

Figure 57: Indoor Unit Knockout (Communication Wires)

Due to our policy of continuous product innovation, some specifications may change without notification.
©LG Electronics U.S.A., Inc., Englewood Cliffs, NJ. All rights reserved. "LG" is a registered trademark of LG Corp.

ELECTRICAL WIRING

Indoor Unit Electrical Connections

Figure 58: Typical Indoor Unit Terminal Block with Grounding Cable

Figure 59: Typical Indoor Unit Terminal Block Connections

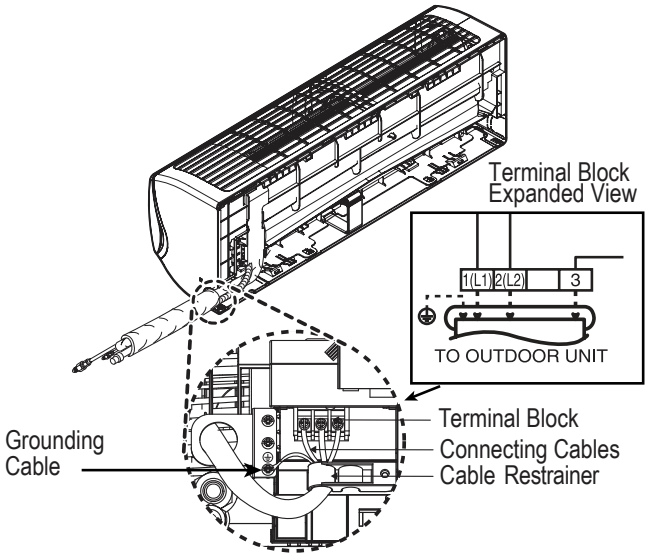

Figure 60: Indoor Unit to Outdoor Unit / Branch Distribution Unit Terminal Connections—LAN090HSV4 and LAN120HSV4.

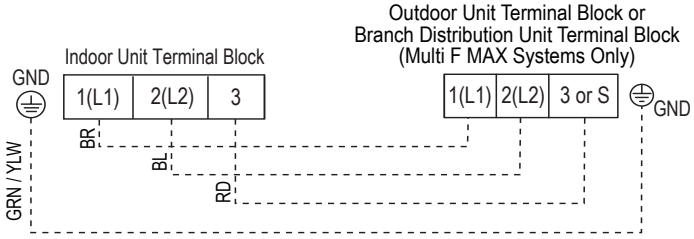

Figure 61: Indoor Unit to Outdoor Unit / Branch Distribution Unit Terminal Connections—LAN180HSV4.

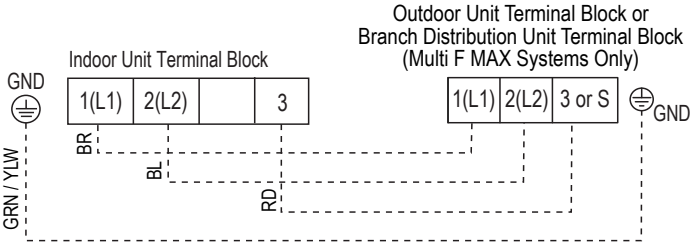

Due to our policy of continuous product innovation, some specifications may change without notification.
©LG Electronics U.S.A., Inc., Englewood Cliffs, NJ. All rights reserved. "LG" is a registered trademark of LG Corp.

LG Monitoring View (LGMV) Diagnostic Software

LGMV software (PRCTSL1 and PRCTFE1) allows the service technician or commissioning agent to connect a computer USB port to the outdoor unit's main printed circuit board (PCB) using an accessory cable. The monitoring screen for LGMV allows the user to view the following real time data on one screen (Figure 62):

- Actual inverter compressor speed
- Target inverter compressor speed
- Actual outdoor fan speed
- Target outdoor unit fan speed
- Actual superheat
- Target superheat
- Actual subcooler circuit superheat
- Target subcooler circuit superheat
- Main EEV position
- Subcooling EEV position
- Inverter compressor current transducer value
- Outdoor air temperature
- Actual high pressure/saturation temperature
- Actual low pressure/saturation temperature
- Suction temperature
- Inverter compressor discharge temperature
- Front outdoor coil pipe temperature
- Back outdoor coil pipe temperature
- Liquid line pipe temperature
- Subcooler inlet temperature
- Subcooler outlet temperature
- Average indoor unit (IDU) pipe temperature
- Inverter compressor operation indicator light
- Liquid injection valves' operation indicator lights
- Hot gas bypass valve operation indicator light
- Four-way reversing valve operation indicator light
- Pressure graph showing actual low pressure and high pressure levels
- Error code display
- Operating mode indicator
- Target high pressure
- Target low pressure
- PCB (printed circuit board) version
- Software version
- Installer name
- Model number of IDUs
- Site name
- Total number of connected IDUs
- Communication indicators
- IDU capacity
- IDU operating mode
- IDU fan speed
- IDU EEV position
- IDU room temperature
- IDU inlet pipe temperature
- IDU outlet pipe temperature
- IDU error code

Figure 62: MV Real-time Data Screen.

Note:

Images on these pages are examples of LGMV screenshots. Actual images may differ depending on the version of the software and the unit installed.

Additional screens can be accessed by tabs on the main screen. Additional screens include the following:

1. Cycleview (Figure 63): Graphic of internal components including:
   - Compressors showing actual speeds
   - EEVs
   - IDUs
   - Temperature and pressure sensors
   - Four-way reversing valve
2. Graph: Full screen graph of actual high and low pressures and high and low pressure limits. A sliding bar enables user to go back in time and view data.
3. Control FTN: Enables user to turn on IDUs in 1.8°F increments.
4. Useful Tab
   - Unit Conversion: Converts metric values to imperial values.
5. Data

Figure 63: MV Cycleview.

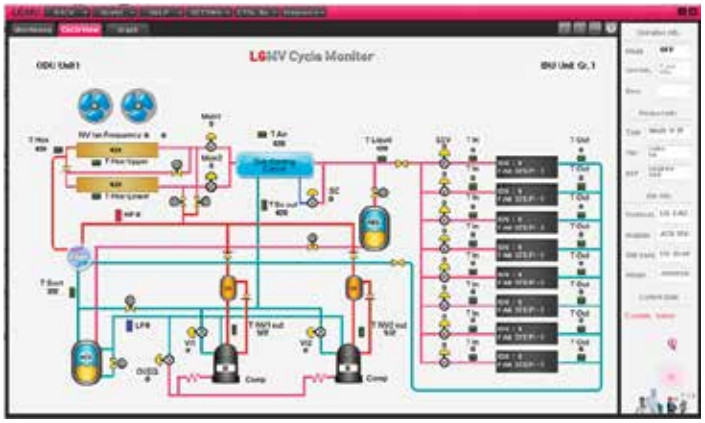

Due to our policy of continuous product innovation, some specifications may change without notification.
©LG Electronics U.S.A., Inc., Englewood Cliffs, NJ. All rights reserved. "LG" is a registered trademark of LG Corp.

LG Monitoring View (LGMV) Diagnostic Software and Cable - Continued

- Data Saving Start: Recording of real time data to a separate file created to be stored on the user's computer.
- Data Loading Start: Recorded data from a saved ".CSV" file can be loaded to create an LGMV session.

6. Monitoring
   - Electrical: The lower half of main screen is changed to show Inverter Compressor Amps, Volts, Power Hz, Inverter control board fan Hz.

Note:

Images on these pages are examples of LGMV screenshots. Actual images may differ depending on the version of the software and the unit installed.

Figure 64: MV Control Indoor Units Screen.

Error Codes

LGMV software helps the service technician or commissioning agent to troubleshoot system operation issues by displaying malfunction codes (Figure 65). These error codes can be seen on the main screen of the LGMV software program. For an overview of Single Zone unit error codes, see Error Codes section. For detailed information on how to troubleshoot individual error codes, see the Single Zone Service Manual.

The software is available in a high version with all of the listed features. The low version has all features as the high version without Target High Pressure and Target Low Pressure values shown on main screen.

In lieu of connecting to the outdoor unit, there is the option to connect to an IDU with the use of a USB to RS-485 connector kit. When connected through an IDU, the user will not be able to record data.

This software can be used to both commission new systems and troubleshoot existing systems. LGMV data can be recorded to a ".CSV" file and emailed to an LG representative to assist with diagnostic evaluations.

Figure 65: Error Code Screen.

Recommended Minimum PC Configuration:

- CPU: Pentium® IV 1.6 GHz
- Main Memory: 1G
- Operating System: Windows® XP/Vista/7 32 bit (recommended), 64 bit
- Hard Disk: 600 MB when operating
- MS Office 2003, 2007 (recommended) for select reporting functions

Due to our policy of continuous product innovation, some specifications may change without notification.
©LG Electronics U.S.A., Inc., Englewood Cliffs, NJ. All rights reserved. "LG" is a registered trademark of LG Corp.

The SIMs WLAN module and the smart phone app together provide monitoring and troubleshooting capability for LG Duct Free Systems. SIMs functions only with LG Duct Free products (Figure 66).

SIMs can display and graph operational data for the air conditioner system including the indoor unit and the outdoor unit. SIMs also displays error codes and a troubleshooting guide. A full copy of the LG SIMs Smart Inverter Monitoring System User's Manual is available on the www.lghvac.com website.

To use SIMs you must be a trained HVAC service technician familiar with variable refrigerant flow (VRF) systems in general and with LG's Duct Free System products. You should understand the inverter air conditioning operation cycle, the meaning of the data displayed by SIMs, and how to use the data to troubleshoot the system.

Figure 67 shows a typical Multi F configuration used with the SIMs module and app.

Figure 66: LG SIMs App and WLAN Module

⚠ WARNING

High voltages capable of causing death are used in this equipment. Outdoor unit power remains connected during this procedure. Take extreme caution not to touch electrical components or connections. Failure to observe this warning can result in death or severe injury.

Figure 67: SIMs WLAN Module to a Typical Multi F System

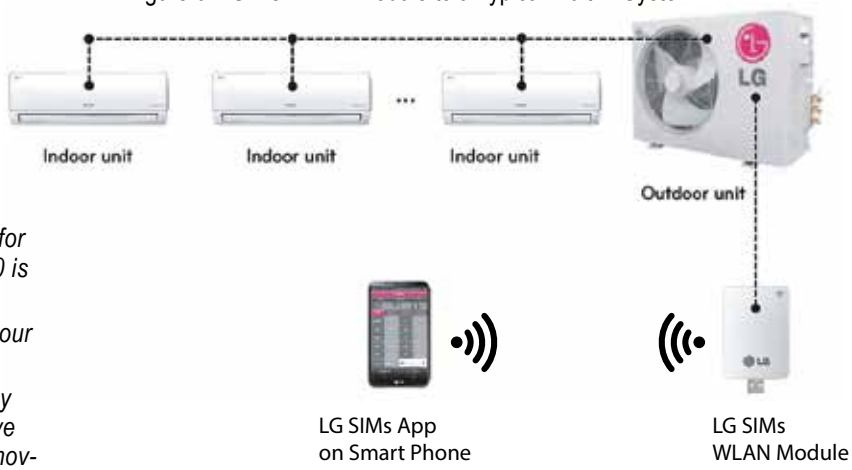

Note:

- *The Duct Free System air conditioning system must run for at least 15–20 minutes before data collected by SIMs 2.0 is valid for troubleshooting.*
- *You must have the free SIMs app correctly installed on your smart phone before using SIMs.*
- *Some ODUs have an LGMV extension cable accessed by removing the side handle cover. If the ODU does not have this extension cable, access the LGMV connector by removing the top cover of the ODU.*

SIMs App Main Info Screen

The main screen (Figure 68) is the first screen displayed after wireless connection is established. Tap the Main Info tab to display current readings regarding your indoor and outdoor unit(s). The Operational Info area of the screen will show active functions or modes by illuminating the light to the right of the function.

Additional Help information can be accessed by tapping the Help Menu buttons at the bottom of this screen.

Figure 68: SIMs App Main Info Screen

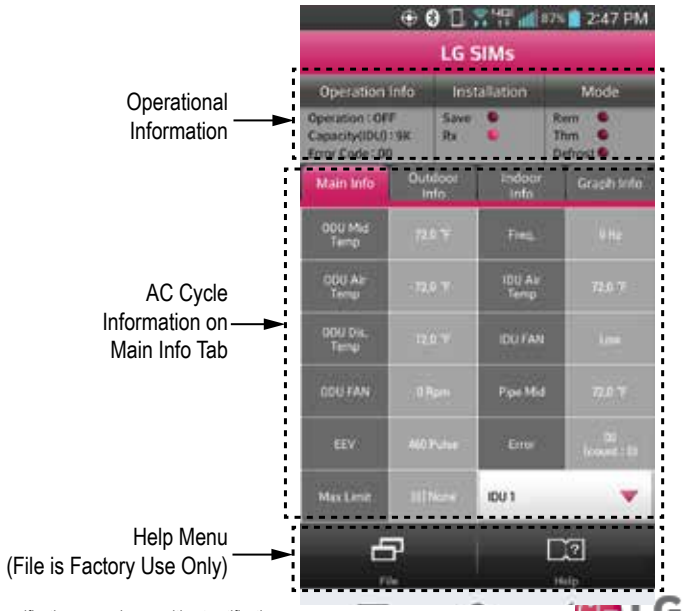

Due to our policy of continuous product innovation, some specifications may change without notification.
©LG Electronics U.S.A., Inc., Englewood Cliffs, NJ. All rights reserved. "LG" is a registered trademark of LG Corp.

SIMs App Screens

Outdoor Info/ Component Screen

Displays the following information:

- Frequency
- FAN1 RPM
- FAN2 RPM
- DC Link
- Current
- Voltage
- EEV Mode
- Restart Timer
- Comp Mode
- EEV

Outdoor Info/ Temperature Screen

Displays the following information:

- Inv TD
- Suction
- Discharge
- Cond Mid
- Cond Out
- Heatsink
- Air Temp

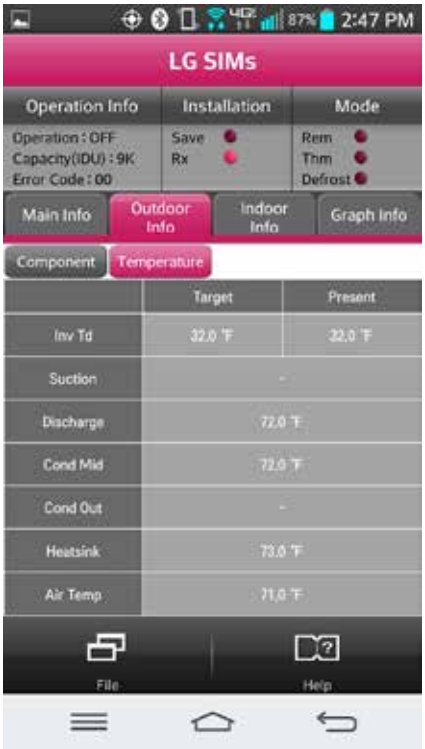

Indoor Info Tab

Displays the following information:

- Frequency
- Operation
- THM Mode
- REM Mode
- FAN
- EEV
- Air Temp
- Pipe-in
- Pipe-mid
- Pipe-out

Graph Info Tab

This tab, has three sub sections:

- IDU - Indoor Unit Temperature graph. Displays IDU information in graph format. Information displayed is for the IDU # selected on the Main screen.
- ODU - Outdoor Unit Temperature and Frequency graph. Displays ODU information in graph format.
- ODU Electric - Outdoor Unit Electric data graph is displayed.

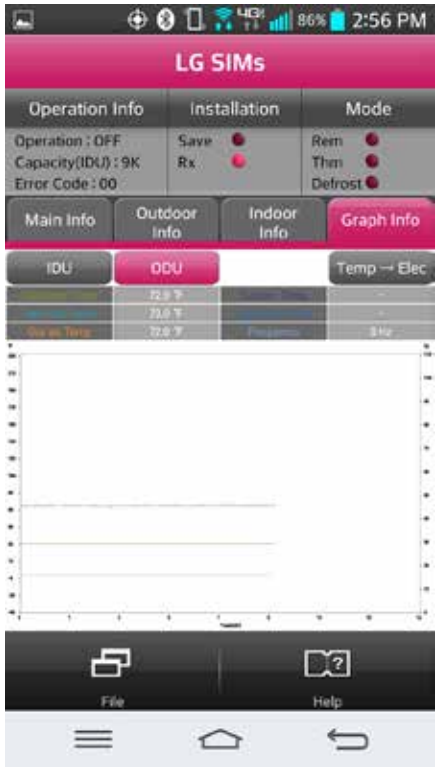

Due to our policy of continuous product innovation, some specifications may change without notification.
©LG Electronics U.S.A., Inc., Englewood Cliffs, NJ. All rights reserved. "LG" is a registered trademark of LG Corp.

Wall-Mounted Sensor Installation

Proper indoor unit operation depends on the location of the room sensor. A good location will protect the zone controller from direct sunlight and external local sources of water vapor, and heated or cooled air. If no mounting height was specified by the building designer, place the handy box approximately fifty-five (55) inches above the finished floor.

- It may be necessary to use a handy box that is sized in metric units, depending on the controller model. Check with your LG representative to verify which size of handy box is needed for the zone controller in question.
- Use only LG-supplied communications cable. Using field-supplied cable may result in communications problems between the zone controller and the indoor unit.
- Maintain the minimum distance required between the communications cable and power wiring. The minimum required space between the two is dependent on the voltage of the power wiring. Refer to the appropriate Multi V Outdoor Unit Engineering Manual for minimum distance specifications.

⃠ Do not route power wiring and communications cables in the same conduit.

⃠ Do not cut the quick-connect plugs off or adjust the length of the cable. Keep the communications cable away from high voltage wires and electromagnetic field (EMF) producing equipment.

Wall-Mounted Controller Installation

Since the room temperature sensor is inside the remote controller, the remote controller should be installed in a place away from direct sunlight, high humidity and direct supply of hot or cold air to maintain proper space temperature. Install the remote controller about five (5) feet above the floor in an area with good air circulation and an average temperature.

⃠ Do not install the remote controller where it can be affected by the following:

- Drafts or dead spots behind doors and in corners
- Hot or cold air from ducts
- Radiant heat from sun or appliances
- Concealed pipes and chimneys
- Uncontrolled areas such as an outside wall behind the remote controller

This remote controller is equipped with a seven segment LED display. For proper display of the remote controller LEDs, the remote controller should be installed properly as shown below. The standard height is 4 - 5 ft from floor level.

Figure 69: Wired Remote Controller Installation.

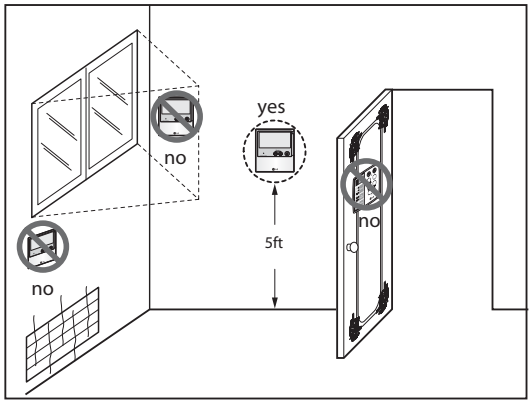

1. Pull communications cable between the zone controller handy box (if used) and the indoor unit. The wall-mounted zone controller comes with a thirty-three (33) foot length of cable.
2. Store a minimal amount of cable in the handy box. Any additional cable should be coiled and stored near the indoor unit control panel.
3. If additional cable length is needed, order a thirty-three (33) foot LG Wired Remote Group Control Extension cable (Model No. PZCWRC1).
4. If the cable between the zone controller and the indoor unit is too long, do not cut the cable and shorten. Coil any spare communications cable, tie-wrap it, and leave it next to the indoor unit location.

Due to our policy of continuous product innovation, some specifications may change without notification.
©LG Electronics U.S.A., Inc., Englewood Cliffs, NJ. All rights reserved. "LG" is a registered trademark of LG Corp.

Troubleshooting Using Error Codes

Refer to Table 27 for information on the error codes that are generated from the indoor and outdoor units. These codes are the most common that will manifest through these units. Your particular model duct free system might generate additional codes not listed here. Please contact LG Support if you see these types of errors and a simple power down and boot up has not corrected the issue. You should not attempt to fix the system yourself.

Error Codes

- Refer to the figures below for your particular indoor unit's LED configuration.
- Indicate different types of unit failures, assists in self-diagnosis and to track the frequency of occurrence.
- Error codes are shown on the LEDs of indoor units, wired remote controller, the Single Zone unit control board, and LG Monitoring View (LGMV) Diagnostic Software.
- If two or more errors occur simultaneously, the lower error code number is displayed first.
- After error is resolved, the error code does not display.

Decoding the Error Display

The first and second number on the LED indicates error number. Example: 21 = LED1 (Green light) 2x blink, LED2 (Red light) 1x blink

Error Code Nomenclature Definitions

- MICOM: Non-volatile memory chip where unit setup information is stored.
- EPROM: Non-volatile memory chip where device identification, size, and factory defined default component operating parameters are stored.

Figure 70: Example of IDU LEDs

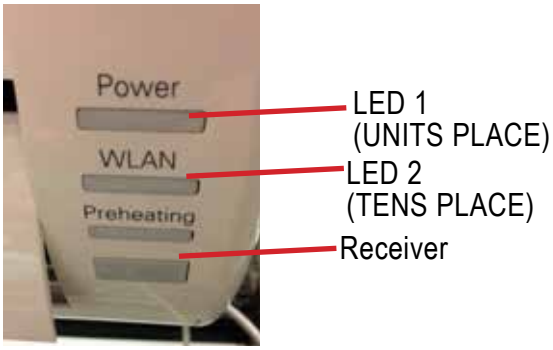

Table 27: Multi Zone Wall-Mounted Indoor Unit Error Codes

Error Code	Description	No. of Times Indoor Unit LEDs Blink	
		LED1 (Plasma LED)	LED2 (Power LED)
1	Indoor unit room temperature sensor error	1X	-
2	Indoor unit inlet pipe sensor error	2X	-
4	Float switch error (optional)	4X	-
5	Communication error between indoor unit and outdoor units	-	5X
6	Indoor unit outlet pipe sensor error	6X	-
9	Indoor unit EPROM error	9X	-
10	Indoor unit BLDC motor fan lock	-	1X
12	Indoor unit middle pipe sensor error	2X	1X

Due to our policy of continuous product innovation, some specifications may change without notification.
©LG Electronics U.S.A., Inc., Englewood Cliffs, NJ. All rights reserved. "LG" is a registered trademark of LG Corp.

Troubleshooting Using Error Codes - Continued

Table 22: Multi Zone Wall-Mounted Indoor Unit Error Codes - Continued

Error Code	Description	No. of Times Indoor Unit LEDs Blink	
		LED1 (Plasma LED)	LED2 (Power LED)
21	DC Peak (IPM Fault); Compressor DC voltage was too high	2X	1X
22	Current Transformer2 (CT2) error; Alternating current (AC) input too high	2X	2X
23	DC Link Low Volt	2X	3X
25	AC Low/High Volt	2X	5X
26	DC Comp Position Error (not providing rotation), Locking	2X	6X
27	PSC Fault; Current to inverter compressor between AC and DC converter circuit too high	2X	7X
28	Inverter compressor DC voltage is too high	2X	8X
29	Inverter compressor amperage is too high	2X	9X
31	Current-to-current transformer (CT) thermistor is too low	3X	1X
32	Inverter Compressor Discharge Pipe (D-Pipe) Overheat	3X	2X
40	CT Sensor Error; Thermistor is disconnected or shorted out	4X	-
41	D-Pipe Sensor INV is disconnected or shorted out	4X	1X
44	Outdoor Air Sensor is disconnected or shorted out	4X	4X
45	Middle thermistor of outdoor unit condenser coil is disconnected or shorted out	4X	5X
46	Outdoor unit suction line thermistor is disconnected or shorted out	4X	6X
48	Outdoor unit coil outlet (liquid line) thermistor is disconnected or shorted out	4X	8X
53	Communication failure from outdoor unit to indoor unit	5X	3X
60	Outdoor unit printed circuit board (PCB) EPROM check sum error	6X	-
61	Outdoor unit condenser coil temperature is too high	6X	1X
62	Outdoor unit inverter compressor PCB heat sink temperature is too high	6X	2X
63	Condenser coil pipe thermistor temperature is too low	6X	3X
65	Heat sink thermistor has disconnected or has shorted out	6X	5X
67	Outdoor brushless direct current (BLDC) fan motor lock error	6X	7X

Refer to Service Manuals posted on www.lghvac.com for a full description of all error codes and workarounds.

Due to our policy of continuous product innovation, some specifications may change without notification.
©LG Electronics U.S.A., Inc., Englewood Cliffs, NJ. All rights reserved. "LG" is a registered trademark of LG Corp.

Cautions for Refrigerant Leaks

ASHRAE Standards 15-2010 and 34-2010 offer guidelines that address refrigerant safety and the maximum allowable concentration of refrigerant in an occupied space. Refrigerant will dissipate into the atmosphere, but a certain volume of air is required for this to occur safely. For R410A refrigerant, the maximum allowable concentration is 0.026 lbs./ft^3 per 1,000 ft^3 of air in an occupied space. Buildings with twenty-four (24) hour occupancy allow half of that concentration.[1]

ASHRAE Standards 15 and 34 assume that if a system develops a leak, its entire refrigerant charge will dump into the area where the leak occurs. To meet ASHRAE Standards 15 and 34, calculate the refrigerant concentration that may occur in the smallest room volume on the system, and compare the results to the maximum allowable concentration number (see below for information on how to calculate the refrigerant concentration).[1] Also consult state and local codes in regards to refrigerant safety.

⚠ WARNING

Verify the maximum refrigerant concentration level in the space where the indoor unit will be mounted meets the concentration limit for the application. If the refrigerant leaks and safety limits are exceeded, it could result in personal injuries or death from oxygen depletion.

Note:

Take appropriate actions at the end of HVAC equipment life to recover, recycle, reclaim or destroy R410A refrigerant according to applicable US EPA rules.

To calculate the potential refrigerant concentration level (RCL):

1. Measure the occupied space dimensions (in feet).
2. Calculate the cubic foot volume of air in the smallest occupied space. (To obtain a detailed overview of the RCL, perform the same calculations to the second smallest zone, the third smallest zone until the RCL is obtained for all zones. Also, pay special attention to areas such as basements, etc., where refrigerant cannot dissipate easily.)
3. Divide the refrigerant charge of the Single Zone system serving the area in pounds by the results of step 1.
4. If the calculation indicates that the potential refrigerant concentration level is higher than the allowed RCL, increase the cubic volume of the smallest occupied space or modify the piping system design.
5. The allowable RCL limit for most applications must be equal to or less than 0.026 lbs./ft^3. In special occupied spaces, however, such as hospitals and nursing homes where occupants may have limited mobility, the allowable RCL limit is cut in half. See ASHRAE Standard 34-2007 and local codes for detailed information.[1]

[1] *American Society of Heating, Refrigeration and Air Conditioning Engineers, Inc. (ASHRAE). Atlanta, GA. ASHRAE, Inc. Information about ASHRAE Standard 15-2010 / 34-2010 and addenda current as of the date of this publication.*

Refrigerant Concentration Limit (RCL) Calculations

To calculate total refrigerant amount per system:

Amount of Factory-Charged Refrigerant per Outdoor Unit	+	Amount of Additional Refrigerant Trim Charge	=	Total System Refrigerant Charge

$$\text{RCL (lbs./ft}^3\text{)} = \frac{\text{Total System Refrigerant Charge (lbs.)}}{\text{Volume of Smallest Occupied Space (ft}^3\text{)}}$$

Due to our policy of continuous product innovation, some specifications may change without notification.
©LG Electronics U.S.A., Inc., Englewood Cliffs, NJ. All rights reserved. "LG" is a registered trademark of LG Corp.

INSTALLATION CHECKLIST

MULTI F
MULTI F MAX

System ID No.: _____ Indoor Unit ID.: _____

Checked by: _____ Date:_____ Signature:_____

Major Component Rough-In

Description	Check
Single Zone unit was connected properly per local code and the product installation procedures.	
All literature and bagged accessories have been removed from the fan discharge.	
Indoor unit was installed, properly supported, and located indoors in a non-corrosive environment.	
Single Zone unit's gravity condensate drain line was connected and routed where it properly drains away or, if installed in a mechanical room, was connected and properly routed to a drain terminal.	

Piping and Insulation

Description	Check
Copper	
Over 5/8 inches—Rigid ACR only.	
5/8 inches and under—Can use soft ACR.	
15% silver brazing material only.	
All refrigerant pipes and valves were insulated separately. Insulation butts up against the walls of the indoor units. No gaps or cracks. Insulation was not compressed at clamps and hangers.	

Brazing Practices

Description	Check
Medical grade (there are 4 available) dry nitrogen for purging during brazing was used (constant 3 psi while brazing).	

Installation

(For more information on any procedure, refer to the detail provided in the installation section.)

Refrigerant Piping

Description	Check
All pipe materials were properly stored, capped, and clean. All burrs were removed after cutting and pipe ends were reamed before brazing.	
During refrigerant pipe installation, for each segment of pipe, a record was made of the pipe length (including expansion loops, offsets, double-back sections), and sizes, as well as the quantity and type of elbows used.	
All long runs of straight pipe were provided with expansion loops.	
A torque wrench and backup wrench were used to tighten all flare connections.	
The back side of all flares were lubricated with a small drop of PVE refrigeration oil before tightening flare fittings.	
Ensure all field made flares are 45°. Use factory-supplied flare nuts only.	
Pipe segments were properly supported and all wall penetrations were sleeved.	
Pipe insulation was not compressed at any point.	
No oil traps, solenoid valves, sight glasses, filter driers, or any other unauthorized refrigerant specialties were present.	
Best practice including a minimum of 20" of straight pipe was installed between each elbow.	

Due to our policy of continuous product innovation, some specifications may change without notification.
©LG Electronics U.S.A., Inc., Englewood Cliffs, NJ. All rights reserved. "LG" is a registered trademark of LG Corp.

INSTALLATION CHECKLIST

System ID No.: _____ Indoor Unit ID.: _____

Checked by: _____ Date:_____ Signature:_____

Condensate Pump / Drain Installation

Power Wire and Communications Cables

Description	Check
Power wiring was connected to a single phase 208-230V source.	
Ground wire was installed and properly terminated at the unit.	
The power supplied was clean with voltage fluctuations within specifications. (±10% of nameplate).	
Power wiring to the Single Zone outdoor unit was installed per all local electrical code requirements.	
Power wiring to the indoor unit was installed per all local electrical code requirements.	
LG-supplied cable was used between the indoor unit and its zone controller. No cables were spliced and no wire caps are present.	
Communication type RS-485–BUS type.	
All communications cables were a minimum of 18-AWG, four (4) conductor, shielded, and stranded, with insulation material per local code. Cable segment shields were tied together.	
Used appropriate crimping tool to attach ring or spade terminals at all power wiring and control cable terminations.	
All power and control wires were properly separated using the recommended distance provided in the product installation manual.	

Due to our policy of continuous product innovation, some specifications may change without notification.
©LG Electronics U.S.A., Inc., Englewood Cliffs, NJ. All rights reserved. "LG" is a registered trademark of LG Corp.

Multi F Art Cool™ Mirror Wall-Mounted Indoor Unit

Due to our policy of continuous product innovation, some specifications may change without notification.
©LG Electronics U.S.A., Inc., Englewood Cliffs, NJ. All rights reserved. "LG" is a registered trademark of LG Corp.

Who to call for assistance

Freight Damage and Unit Replacements	Your LG Manufacturer Representative
Missing Parts	Your LG Manufacturer Representative
Freight Damage and Unit Replacements	Your LG Manufacturer Representative
Received Wrong Indoor Unit Model	Your LG Manufacturer Representative
Installation, Startup, and Commissioning Technical Assistance	1-888-865-3026

For warranty information, visit www.lghvac.com.

Due to our policy of continuous product innovation, some specifications may change without notification.
©LG Electronics U.S.A., Inc., Englewood Cliffs, NJ. All rights reserved. "LG" is a registered trademark of LG Corp.

LG Electronics
Commercial Air Conditioning Division

11405 Old Roswell Road

Alpharetta, Georgia 30009

www.lghvac.com

LG Customer Information Center, Commercial Products

1-888-865-3026 USA

Follow the prompts for commercial A/C products and parts.

IM_Multi_F_ArtCoolMirrorWallMount_5_15
Original Issue