PENTAIR

WHOLE HOUSE IRON REDUCTION SYSTEMS
1.0, 1.5
SERVICE MANUAL

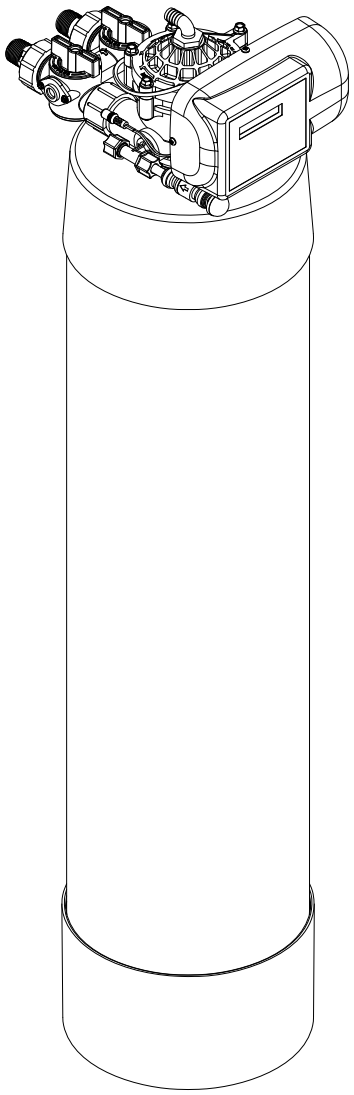

TABLE OF CONTENTS

Application Limitations.....3

Operation Specifications.....3-4

Pre-Installation Instructions 4

Maintenance Requirements 4

Installation Instructions 4-8

Control Information 9

Programming the Control (Installer Level) 10-12

Start Up Instructions 13

Programming the Control (End user Level).....14

Understanding the Diagnostic Level 15

Exploded Views and Parts Lists 16-22

Troubleshooting Guide 23-24

Warranty Information 25

You now own the finest Water Treatment System available to homeowners. To enjoy the maximum benefits of this system, please read the contents of this Owners Manual.

Application Limitations

pH: The influent water must be between 6.8 and 9.0.

Iron: Maximum influent iron concentration is 5.0ppm.

Iron Bacteria: If iron bacteria are present, frequent service may occur and the life of the system may be limited. By properly controlling the iron bacteria with chlorine or other approved methods for bacterial reduction, the system will function properly.

Manganese: Maximum influent manganese concentration is 2.0 ppm; amounts over 2.0 ppm may gradually prevent iron removal. For optimum manganese reduction, the pH should be between 8.0 and 9.0. If both iron and manganese are present, the pH should between 8.0 - 8.5.

Organic Matter (Tannins): The presence of organics above 2.0 ppm may hinder the operation of the system.

Chlorine: The presence of chlorine in the raw water supply should be limited to a maximum of 1.0 ppm.

OPERATIONAL SPECIFICATIONS

MODEL	MEDIA AMOUNT (cu.ft)	SERVICE FLOW RATE (gal/min)	PSI DROP AT SERVICE FLOW RATE	DRAIN FLOW RATE (GAL/MIN)
PENTAIR IRON REDUCTION SYSTEM 1.0	1.0 CUFT	5.0 GPM	3 PSI	5.0
PENTAIR IRON REDUCTION SYSTEM 1.5	1.5 CUFT	5.0 GPM	3 PSI	5.0

THE ORDER NUMBER FOR THE REPLACEMENT MEDIA IS 14816.

POWER REQUIREMENTS

The computer board receives power from an external wall-mount transformer, supplied with each system.

Voltage: The voltage supplied to the computer board is 24V AC.

Frequency: The line frequency is 50 Hz or 60 Hz.

WATER PRESSURE

A minimum of 20 pounds of water pressure is required for proper operation of the system. The stated operating pressure range is 20 psi - 120 psi (138 kPa - 828 kPa).

BYPASS VALVE

The bypass valve enables the customer to bypass the system in situations of: emergency leaks in the equipment, service calls and/or outdoor water use.

TEMPERATURE OPERATING RANGES

Operating Temperature Range: 40° F - 100° F (4.4° C - 38° C)

Storage Range: The computer board can be stored at temperatures from -20°C (-4°F) to 70°C (158°F).

Humidity: The computer board operates properly with relative humidity from 10% to 95%, non-condensing.

ENVIRONMENTAL REQUIREMENTS

Location: The water filter and control cannot be exposed to outdoor elements, such as direct sunlight or atmospheric precipitation. The system may be installed in a covered, open-air structure such as a carport, residential or commercial building. Weather covers are also available through the Order Department (part number 72370 or 71345).

PRE-INSTALLATION INSTRUCTIONS

- Do not install this system where water is microbiologically unsafe or of unknown quality without adequate disinfection before or after the system.
- This system must be installed in an area that is not affected by extreme heat, cold or the elements. The selected installation area must be adequate for easy service of all parts.
- This system must be installed in accordance with all applicable state and local laws and regulations.
- This system is designed to treat cold water only and can be installed on any cold water supply.

MAINTENANCE REQUIREMENTS

- Clean the backwash flow control.
- Verify that the flow meter is functioning correctly. Clean the impeller, if necessary.
- Verify the programming of the control. Reprogram, if necessary.
- Verify the minimum and maximum water pressure. Install a pressure reducer, if necessary.
- Replace the filter media every three to five years. Systems used for treatment of high iron will require replacement of the filter media more often. Call your local dealer to replace the filter media (part # 14816)

INSTALLATION INSTRUCTIONS

1. SAFETY PRECAUTIONS

- To prevent accident or injury, do not hoist the unit over your shoulder. Use a hand truck to transport the unit. ***Note: Do not lay the unit on its side during transportation and/or installation.***
- Wear safety glasses and work gloves during installation and service.

2. TEST THE RAW WATER

- Test the raw water supply to ensure it meets the “Application Limitation” on page 3.

3. CHECK WATER PRESSURE

- Use a pressure gauge to confirm that the water pressure does not exceed 120 psi. If the water pressure does exceed this limit, install a pressure regulator on the inlet pipe of the unit. The minimum pressure for a filter is 20 psi. 60 psi is the optimum operating pressure.

4. CHECK THE WELL PUMP FLOW RATE

- Proper backwash is required to maintain the life of the filter media. If installed on a well, check to make sure the well pump can provide a drain flow rate of 5 gallons per minute.

5. LOCATE A SITE FOR THE UNIT

- There are three primary requirements needed for a site: the main water source, a drain (the drain may be a floor drain, a sewer trap, utility sink, vent stack, dry well, etc., depending on local plumbing codes) and an electrical connection. Locate the system as close to these items as practical. Avoid drain lines over 25 feet long. In most applications, bypass any outside faucets.
- Place the unit in the desired location. The location must have a level, smooth surface.
- If the system is located outdoors, protect the unit from direct sunlight. (Direct sunlight can damage the fiberglass and other system components.) If necessary, build a box or shed. ***Note: The system can only be installed outdoors in climates that do not reach freezing levels.***

6. TURN OFF THE WATER AND DRAIN THE PLUMBING

- Turn off the water at the meter or the pressure tank.
- Drain all the pipes. Do not sweat the pipes with water in them; steam will damage plastic parts in the valve.
- To drain the plumbing system, open all the faucets in the house and flush the toilets. This procedure will allow air to enter the plumbing system. The water will drain out of the lowest faucet or outlet.

7. BYPASS THE OUTSIDE FAUCETS

- When possible it is best to bypass the outside faucets. However in some cases the outside faucets can not be accessed. In this situation the bypass valve should be used whenever watering outside for extended periods of time. If the installation is outside or in a garage a faucet can be installed on the inlet water side to provide an option for untreated water.

8. INSTALL THE CHECK VALVE

- Install the check valve (supplied) on the raw water supply feeding the tank. The check valve must be installed in vertical, upflow position with a minimum 12” water column above the check valve. The part number for the check valve is 19736. Please see figures below.

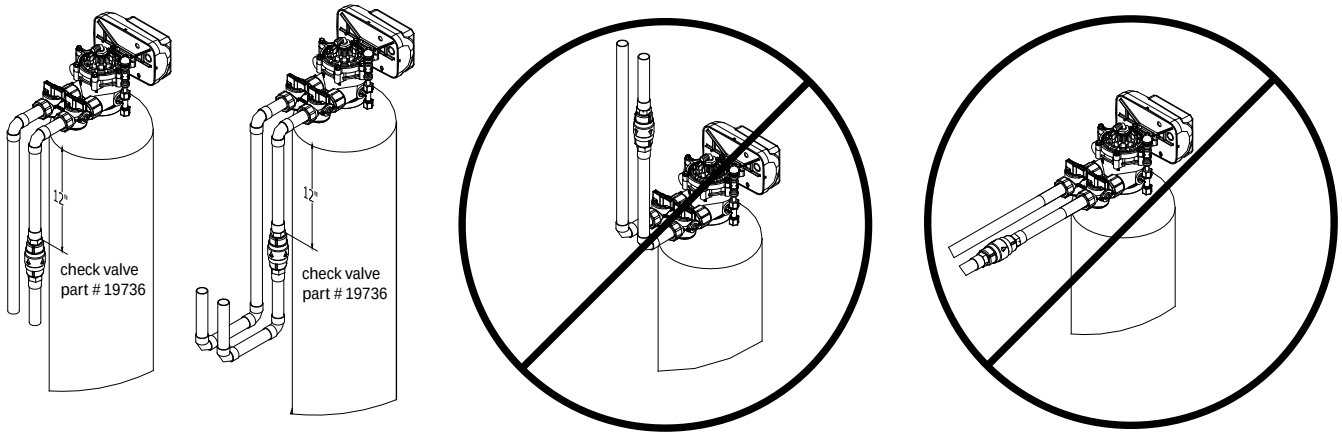

9. CONNECT THE PLUMBING TO THE BYPASS VALVE

- Do not point the soldering torch directly at the system. The thermoplastic material will last a lifetime, within normal operating temperatures, but will melt in a torch flame.
- To prevent hot water from backing up into the condi tioner, avoid short connections of pipe between the conditioner and the hot water heater. If you can't avoid a short connection, move the equipment to another location. As a last resort, install a check valve. If the check valve causes "water hammer", install a water hammer suppressor.

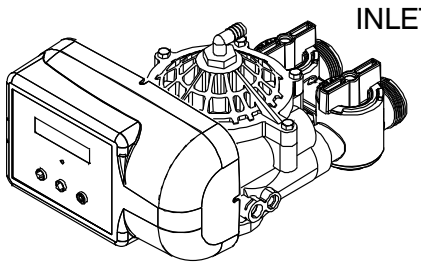

- Connect the raw water pipe to the INLET pipe connection of the bypass valve. When looking at the front of the unit, the inlet is the pipe connection on the LEFT side of the valve.
- Connect the treated water pipe to the OUTLET pipe connection of the bypass valve. When looking at the front of the unit, the outlet is the pipe connection on the RIGHT side of the valve.

10. TURN ON THE WATER AND TEST FOR LEAKS AND FLUSH THE PLUMBING

- Before turning the water back on, place the system in the bypass position, then close all of the faucets except one cold water tap from a bath tub.
- Turn the water on slowly and allow the water to flow out the bath tub for several minutes to remove any dirt, solder, glue, etc. from the plumbing system.
- Once the water runs clear, turn the bypass valve handles to the service position and allow the water to fill the system. It is common for the first few gallons of water to show some color (orange to brown) for a few minutes. Once the water runs clear shut off the bath tub.
- The system will now pressurize, allowing you to check for any leaks.

11. FLUSH THE REMAINING DEBRIS FROM THE SYSTEM

- To flush the remaining untreated water from the plumbing, turn on all the faucets in the house and flush the toilets (approximately two to three minutes per faucet.)
- Run hot water in the bathtub to remove any remaining untreated water.

11. INSTALL THE DRAIN LINE AND AIR GAP

- Using the supplied drain line fitting use Teflon tape on the threads and attach to the top of the valve. Run 1/2 inch ID flexible drain line tubing (not supplied) to an appropriate drain. Most local codes require an air gap. See pictures on the next page. The Air-Gap is not provided with the product.

Note: Drain line may be plumbed with rigid pipe or PEX, if required by local code. The drain connection on the valve will accommodate any standard 3/4 inch NPT fitting.

Note: The regeneration cycle is a simple backwash to refresh the filter bed, followed by an intake of air to establish an air head in the tank. Since no regeneration chemicals are added, the discharge water may be drained to the outside and used for irrigation in climates where freezing is not a concern. Please note that iron in the drain water may cause staining, so avoid situations where the water may splash onto walls, vehicles, patios, etc.

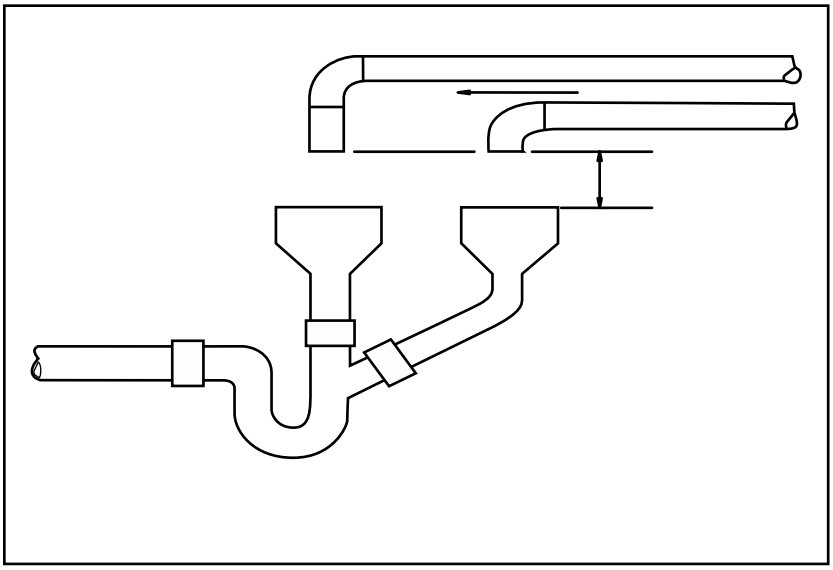

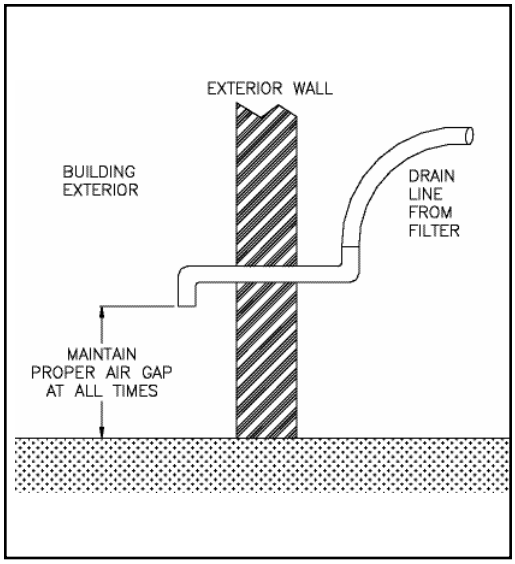

Option for non-freezing climate only

12. INSTALL THE AIR CHECK ASSEMBLY

Air check assembly should be assembled as shown below, with the screen pointing up. Be sure that the molded arrow on the air check valve points down.

***** Complete system not shown

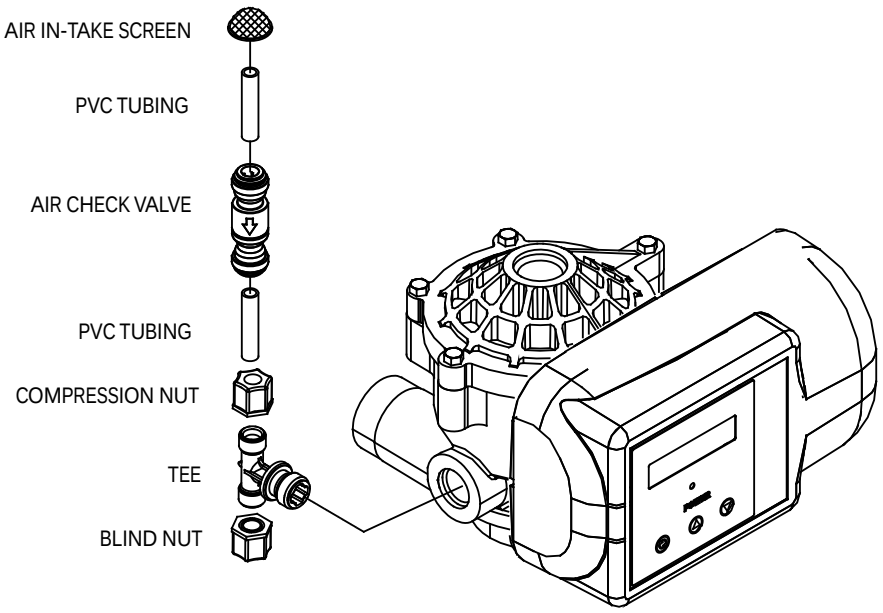

Special Attention for situations where a Filter and a Softener are installed together:

When a whole house filter and a softener are installed side by side, the preferred approach is to run a separate drain line from each unit all the way to the point of termination. If this is not done, there is the potential for drain water from the filter to back feed through the softener and overfill the brine tank, especially when drain lines are run overhead. (Please note that back feed goes only into the brine tank, not the service line.)

If circumstances require you to tie the drain lines together, please use one of the following methods to avoid back feed issues:

Option 1: Run the drain lines from both systems to the point of termination, and tee them together before the air gap. (See figures below)

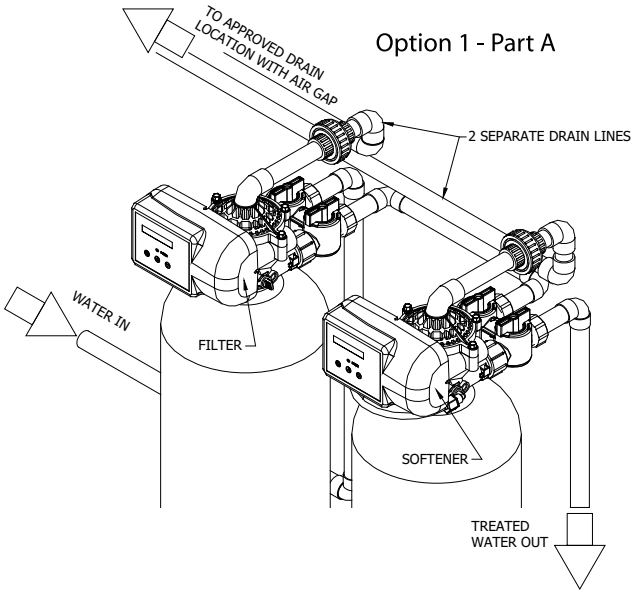

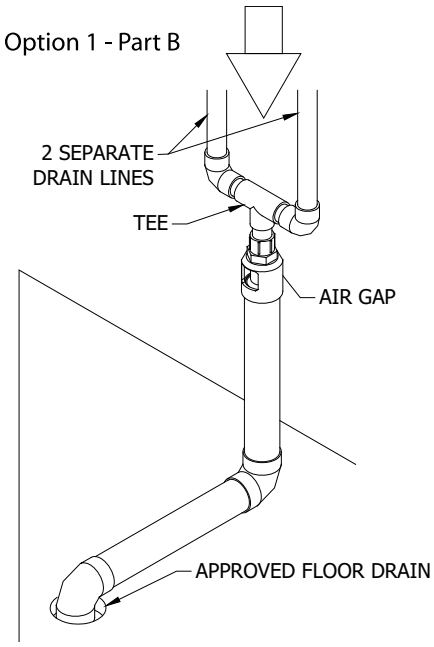

Option 2: Install a PVC check valve with a light spring on the Softener side to prevent back flow to the Softener. (See figure below)

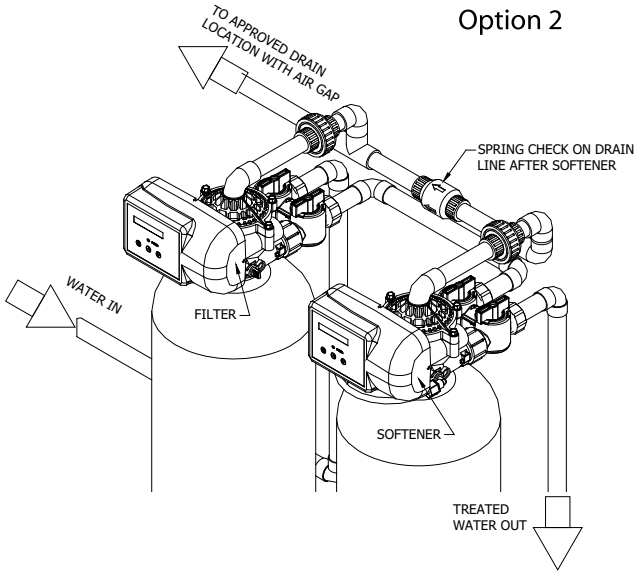

CONTROL INFORMATION

POWER ON LED

A green LED is ON when power is applied to the control and the microprocessor is operating properly.

SERVICE REQUIRED

If the message “For Service Call” or “Service Required” displays in the window of the control without showing the time of day, the control valve has encountered a problem, such as failure to reach the proper position during regeneration. The valve, the motor assembly, and board must be checked to diagnose and fix this problem.

Note: It is normal for the message ‘For Service Call’ followed by a phone number to scroll across the second line of the display. The time of day & capacity remaining will appear on line 1 during normal operation.

TIME CLOCK

The time clock maintains the time of day for an extended period of time in the event of power loss. A super capacitor provides this function and eliminates the need of a battery. In the event the power is off past the charge of the capacitor only the time of day is lost. The rest of the programming is stored in the memory and will not need to be reprogrammed. When the power is restored the clock will restart at 8 AM and will need to be reset.

REGENERATION

Once an immediate regeneration is requested, a complete regeneration must occur to clear the request. Once the regeneration starts, it must finish or the computer board will not clear. Manually walk (scroll) the control through regeneration to clear the computer board. If the regeneration is aborted and the request is not cleared, another immediate regeneration will occur.

HIGH-SPEED MOTOR OPERATION IN THE REGENERATION MODE

High-speed motor operation is achieved while stepping the control through the regeneration cycle. Pressing the scroll button a second time, while in regeneration, activates the higher speed.

PROGRAM LEVELS

To enter any of the program levels, the control must display the time of day and gallons of capacity remaining (Service Mode).

The system have three program levels available:

1. The Installer’s Level: To access the Installer’s Level, you must enter the five key sequence code located on page 10. Please refer to pages 10 - 12 for programming information.
2. The End User’s Level: The End User’s Level does not require a special code to access. Please refer to page 14 for programming information.
3. The Diagnostic Level: Please refer to page 15 for information.

HOW TO PROGRAM THE INSTALLER'S LEVEL

KEY BUTTONS:

- SCROLL BUTTON
- UP ARROW
- DOWN ARROW

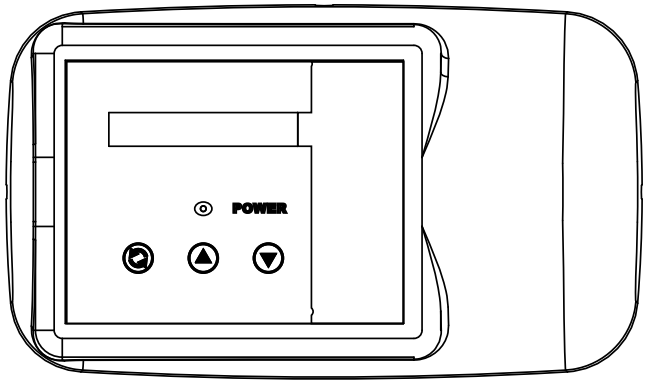

To begin, verify that the control is in the Service Mode.

Time of Day GL Remaining

- Press the DOWN ARROW and hold it for 5 seconds; the control will display:

System Check

- Within 10 seconds, enter the following key sequence:

DOWN ARROW

DOWN ARROW

SCROLL BUTTON

DOWN ARROW

The control is now in the Installer's Level. Use the SCROLL BUTTON to advance through the different settings.

The following settings are available in the Installer's Level:

1. CAPACITY

The control will display:

Capacity: 1000 GL

- Press the UP or DOWN ARROW to change the volume of treated water between regenerations. The gallons are in increments of 100. The setting range is 100 to 999,999 gallons (maximum limit).
- Determining the proper regeneration frequency is based on the amount of daily water use and the amount of Iron in the water. There is no exact science here and its best to reply on personal experience. In most Iron applications, regenerations no more than three days apart is the normal treatment. When sulfur is present, daily regeneration maybe needed depending on the amount. See **DAYS OVERRIDE** on page 11.

Press the SCROLL BUTTON to advance to the next setting.

2. RESERVE CAPACITY

The control will display:

Rsrv: 200 GL Fxd

- To adjust the reserve, press the SCROLL BUTTON. Use the UP OR DOWN ARROW to set the reserve capacity in increments of 10 gallons, up to 70% capacity of the bed.

• To calculate the reserve capacity, take the number of people in the home and multiply it by 70 gallons per day. The reserve capacity will equal one day of water use.
Example: 3 people X 70 gallons per day = 210 gallons (suggested reserve capacity)

• If you prefer, you can select a Variable Reserve. While at the Reserve screen when "Fxd" is flashing, press the UP or DOWN ARROW. The control will display:

Rsrv: Variable

• The reserve capacity will be calculated automatically, based on the daily water consumption. The initial setting is 25% of the capacity, which will adjust over time to accurately reflect daily water use.

Press the SCROLL BUTTON to advance to the next setting.

3. TIME OF REGENERATION

The control will display:

Regen @ 2:00 am

• Press the UP or DOWN ARROW to adjust the time of regeneration.

Regeneration should be set for a time when water use is minimal. 2:00 AM is good for most households.

Note: The system diverts untreated water to the home during regeneration. If any water is drawn during regeneration, some untreated water will enter the plumbing system and possibly the hot water tank. Keep in mind that the regeneration cycle can last up to two hours after the starting time.

Press the SCROLL BUTTON to advance to the next setting.

4. DAYS OVERRIDE

The control will display:

Override: 3 days

• Press the UP or DOWN ARROW to set the number of days between regenerations. The setting range is 1 to 7 days. 3 days is a good starting point for most installations.

Note: This setting "overrides" the flow meter in the sense that it forces the system to regenerate after the selected number of days has passed, even if the gallon capacity setting has not been reached.

5. CYCLE 1 - BACKWASH

The control will display:

Backwash: 10 min

• Press the UP or DOWN ARROW to change the length of the backwash cycle. The setting range is 5 to 99 minutes. We do not recommend a backwash of less than 10 minutes for an iron filter.

Press the SCROLL BUTTON to advance to the next setting.

6. CYCLE 2 - AIR FILL

The control will display:

AIR FILL: 13 min

• Press the UP or DOWN ARROW to change the length of the air fill cycle. The setting range is 8 to 30 minutes.

Note: This cycle controls the amount of air head in the tank. 13 minutes is a good starting point for installations.

Press the SCROLL BUTTON to advance the next setting.

7. CYCLE 3 - RINSE

The control will display:

RINSE: 3 min

• Press the UP or DOWN ARROW to change the length of the fast rinse. The setting range is 0 to 99 minutes (maximum limit). ***Note: In most applications, this setting will not need adjusting.***

Press the SCROLL BUTTON to advance to the next setting.

8. SERVICE PHONE NUMBER

The control will display:

Change Phone? No 000-000-0000

• If you do not want to change the phone number, leave this setting at **NO**. Press **SCROLL** to advance to EXIT.

• To change the number, select **YES**; Press the **UP** or **DOWN** ARROW and then enter the service phone number. Press **SCROLL** to advance through the digits. After setting the number, press **SCROLL** to exit the installer's level; the screen will display:

Exit

Press the **UP** or **DOWN** ARROW to exit the Installer's Level.

Note: If you need to recheck settings or make a change, pressing SCROLL when "EXIT" is displayed will take you back to the start of Installer Settings.

IMPORTANT NOTE: TO ACTIVATE THE NEW SETTINGS, YOU MUST EXECUTE A COMPLETE REGENERATION. IF YOU DO NOT MANUALLY REGENERATE THE SYSTEM, THE SETTINGS WILL NOT BECOME ACTIVE UNTIL THE UNIT HAS COMPLETED THE NEXT SCHEDULED REGENERATION.

SYSTEM START UP INSTRUCTIONS

1. Turn the main shutoff valve until it is just barely open. The unit will release any air trapped inside the valve, without agitating the mineral.
2. Verify that the control is in the Service Mode (time of day and gallons remaining).
3. Allow the water to run for a few minutes until clear; close the faucet.
4. Start an immediate regeneration(see page 11). The first step will be backwash. Allow the water to flow from the drain until all the air has purged from the system.
5. Advance (scroll) the control to AIR FILL. The system will pull air from outside through the air check valve. Make sure it works through the whole AIR FILL step (we suggest 30 minutes as a good starting point) to get enough air in the tank.
6. Advance (scroll) the control to RINSE. Allow the water to flow to drain for 1 minute.
7. Use the SCROLL BUTTON to advance the control back to the Service Mode (time of day and gallons remaining).
8. The installation is now complete.

Note: This system is an aeration type system so it is to be expected that the water will be cloudy and sometimes milky especially on the hot side. This is normal and by allowing the water to sit for a few minutes the air will disappear.

HOW TO PROGRAM THE END USER'S LEVEL

To begin, verify that the control is in the Service Mode.

Time of Day GL Remaining

Press the SCROLL BUTTON to advance to the next setting.

The following settings are available in the End User's Level:

1. TIME OF DAY

The control will display:

Set Time of Day

- Press the UP or DOWN ARROW to program the time of day.

Press the SCROLL BUTTON to advance to the next setting.

2. VACATION MODE

The control will display:

Vacation: **OFF**

- Press the UP or DOWN ARROW to activate the Vacation Mode.

Note: The unit will not regenerate when the Vacation Mode is on.

- The Vacation Mode will deactivate when a flow rate greater than 1.5 gallons per minute has been measured by the meter or when any button is pressed on the control. After the Vacation Mode has been deactivated, the unit will go into an immediate regeneration.

Note: The vacation mode is mainly useful if you have override set to something other than "OFF" and do not want the unit to regenerate during an extended absence.

Press the SCROLL BUTTON to advance to the next setting.

3. IMMEDIATE REGENERATION MODE

The control will display:

Regen in 10 sec

- If the control is left in this position, the timer will countdown from 10 to 0, initiating a regeneration at 0.
- To avoid an immediate regeneration, press the SCROLL BUTTON before the timer reaches 0.

Press the SCROLL BUTTON to advance to the next setting.

4. DELAYED REGENERATION MODE

The control will display:

Regen @ (current setting)

- If the control is left in this position, the unit will regenerate at the programmed time. The display will remain in the Delayed Regeneration Mode until the regeneration has begun.
- To cancel the Delayed Regeneration Mode, press the SCROLL BUTTON.

Press the SCROLL BUTTON to return to the Service Mode.

UNDERSTANDING THE DIAGNOSTIC LEVEL

To begin, verify that the control is in the Service Mode.

Time of Day GL Remaining

• Press the UP ARROW and hold it for 5 seconds; the control will display:

Regen _ Days Ago

The control is now in the Diagnostic Level. Use the SCROLL BUTTON to advance to each diagnostic. If no button is pressed within 5 minutes, the display will return to the Service Mode.

The following items are available in the Diagnostic Level (Read Only):

• Regen _ Days Ago: Displays how many days ago the unit last regenerated.

• In Srvc: Displays how many days the control has been in service.

• # of Regens: Displays the number of regenerations that have taken place since the control was first installed.

• Tot Vol: Displays the total volume of water used since installation.

• Last Rgn @: Displays the amount of water used before the last regeneration.

• Flow Rate: Displays the current flow rate.

• Avg Vol: Displays the average daily water consumption.

• Capacity: The control is programmed for a volume setting. The display will read capacity along with maximum water to be used before regeneration.

• Rsrv: Displays whether the control is programmed for a Fixed or Variable Reserve.

• Regen @: Displays the time of day the unit will regenerate.

• Override: Displays the override mode by showing the number of days programmed into the control.

• Backwash: Displays the minutes of backwash programmed into the control.

• AIR FILL: Displays the minutes of air fill programmed into the control.

• RINSE: Displays the minutes of rinse programmed into the control.

• Units: English - US

• M P Resets: Displays how many times the control has lost power.

• Memory Reset: Displays how many times the control lost power long enough to lose the time of day.

• IF1Fb IronFr02: Displays the current program.

To exit the Diagnostic Level, press the UP or DOWN ARROW at the EXIT display.

VALVE EXPLODED VIEW

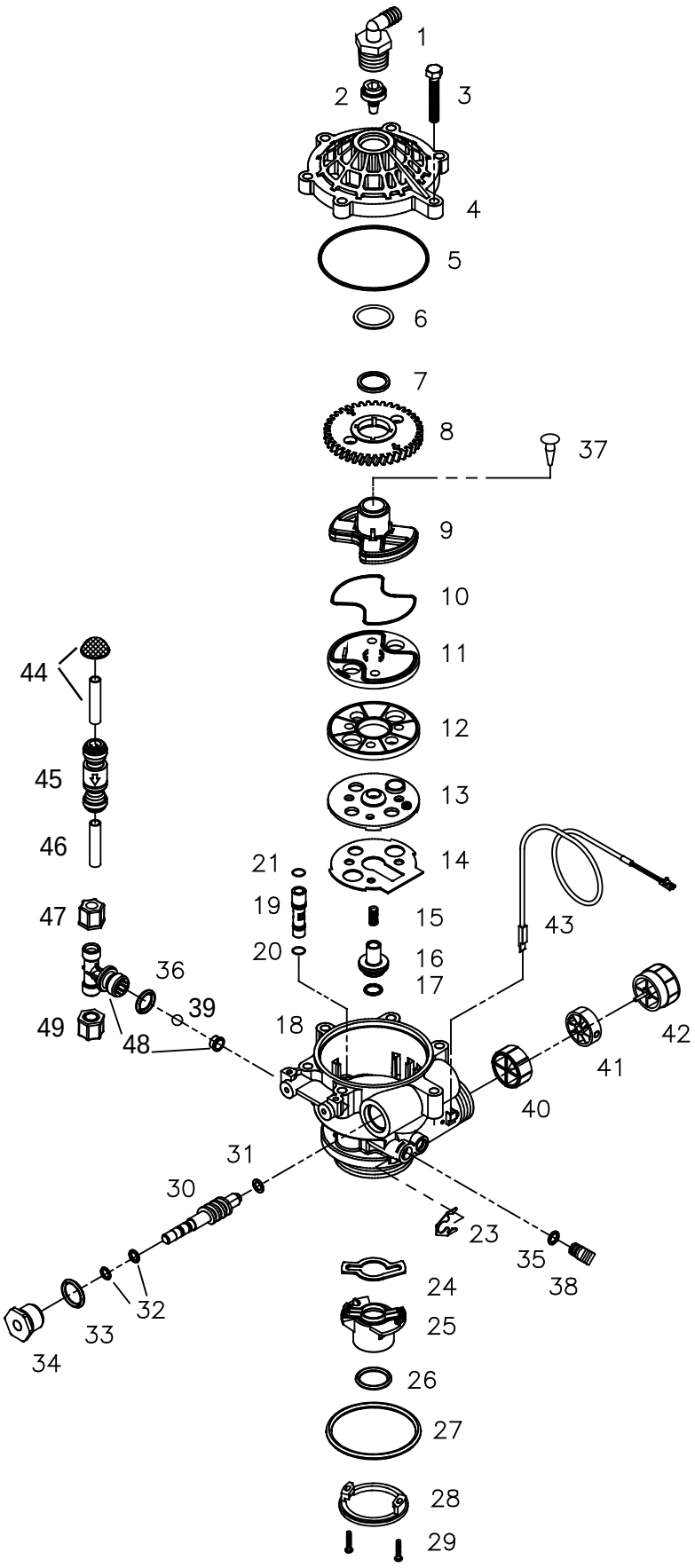

VALVE PARTS LIST

ITEM	QTY	PART NUMBER	DESCRIPTION
1	1	70793	3/4 NPTF TO 1/2 ID HOSE MALE ELBOW (OPTIONAL)
2	1	75074	BACKWASH FLOW CONTROL 5.0 GPM
3	6	72678	SCREW 1/4-20 X 1-1/4 LG HEX WASHER HD
4	1	71083	VALVE BODY COVER
5	1	70658	VALVE COVER O-RING
6	1	72327	TEFLON WASHER
7	1	70665	TEFLON O-RING
8	1	71089	GEAR
9	1	71087	CAM SHAFT
10	1	70656	ROTOR PLATE O-RING
11	1	71132	ROTOR PLATE, COATED
12	1	71084	SEAL DISC, COATED
13	1	71182	INSERT PLATE
14	1	71183	GASKET
15	1	71006	FLOAT VALVE SPRING
16	1	71127	FLOAT VALVE
17	1	70660	FLOAT VALVE O-RING
18	1	72770	VALVE BODY ROTARY GEN-3 W/INSERTS
19	1	71067	GREEN INJECTOR # 5
20	1	70655	INJECTOR O-RING, LOWER
21	1	70664	INJECTOR O-RING, UPPER
23	1	71947	SPRING CLIP
24	1	71344	RISER INSERT GASKET
25	1	71118	RISER INSERT
26	1	70662	RISER INSERT O-RING
27	1	70663	TANK O-RING
28	1	71010	UPPER BASKET ADAPTER RING
29	2	70630	SCREW #6-19 X 3/4 LG SS
30	1	71060	WORM DRIVE SHAFT
31	1	70616	WORM DRIVE SHAFT TEFLON WASHER
32	2	70666	WORM DRIVE SHAFT O-RING
33	1	70661	PACKING GLAND O-RING
34	1	72772	PLASTIC PACKING GLAND ROTARY
35	1	70667	O-RING
36	1	70659	O-RING
37	1	70932	UMBRELLA CHECK (OPTIONAL)
38	1	71958	BRINE LINE PLUG
39	1	70871	BRINE TEE CHECK BALL 3/8 “
40	1	72458	FLOW METER DIFFUSER
41	1	72544	IMPELLER ASSY L W/BUSHING
42	1	72545	HUB FLOWMETER ASSY
43	1	72519	FLOW METER SENSOR CABLE
44	1	19856	IRON FILTER AIR IN-TAKE SCREEN
45	1	19734	CHECK VALVE 3/8 SINGLE
46	1	18772	3/8 HARD PVC TUBING
47	1	70797	COMPRESSION NUT
48	1	71129	TEE/CHECK VALVE
49	1	38812	BLIND NUT
50*	1	19736	CHECK VALVE 1 IN

* ITEM 50 IS NOT SHOWN IN THE VALVE EXPLODED VIEW ON PAGE 15. PLEASE SEE PAGE 5 FOR DETAILS.

CONTROL EXPLODED VIEW

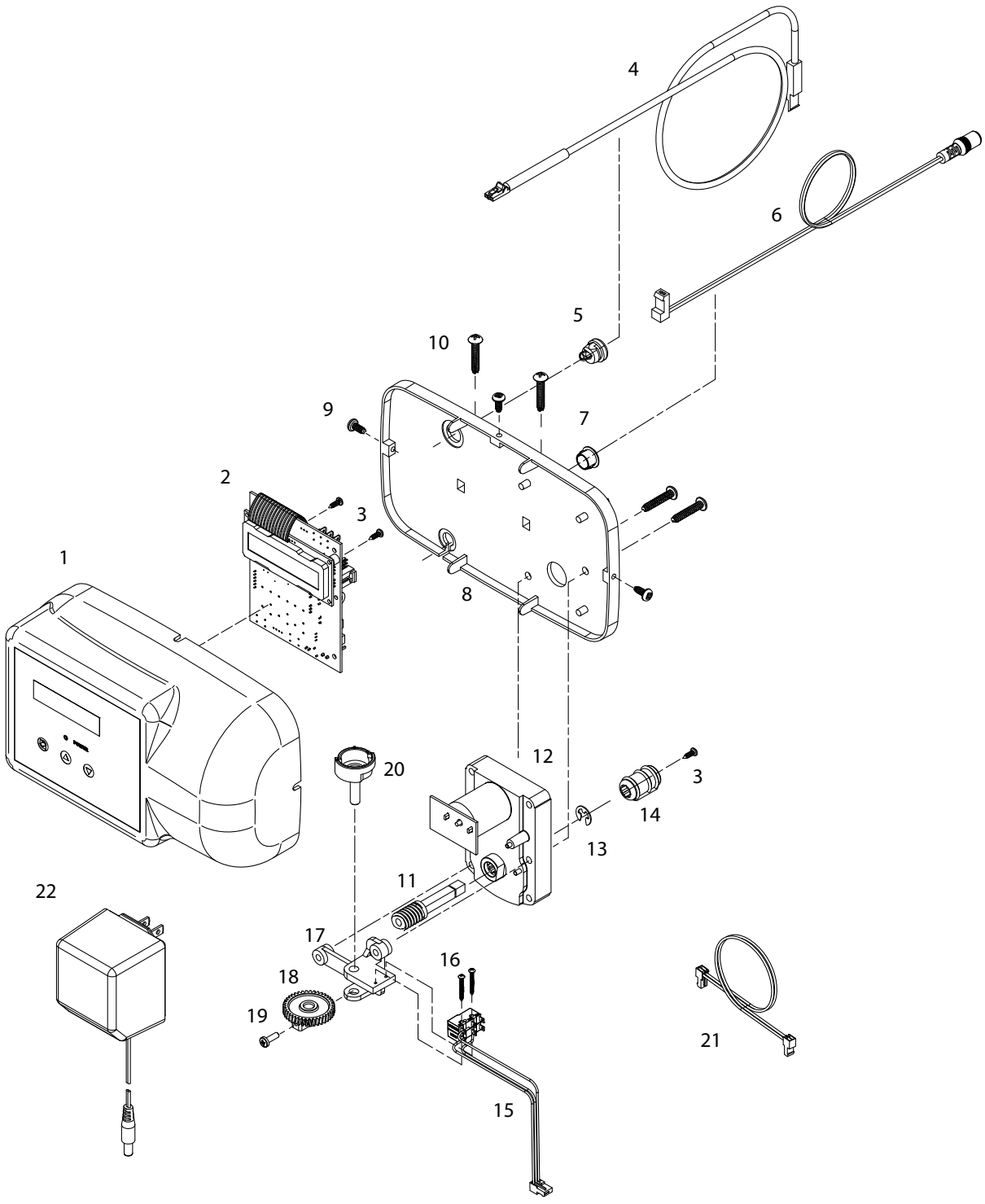

CONTROL PARTS LIST

ITEM	QUANTITY	PART NUMBER	DESCRIPTION
1	1	39497	FRONT COVER ASSY, PENTAIR ROTARY
2	1	38814	BOARD ASSY AERATION FILTER
3	3	70618	SCREW #4-24 X 3/8 LG SELF-THREADING
4	1	72519	FLOW METER SENSOR CABLE NGC
5	1	72134	HEYCO BUSHING, SR 5P-4
6	1	70971	POWER LEAD
7	1	70312	HEYCO BUSHING, SR 2P-4
8	1	70962	ELECTRONIC CONTROL BACKPLATE
9	3	71502	SCREW #8-18 X 3/8 LG, SELF-THREADING
10	4	71497	SCREW #10-16 X 1 LG, TYPE BT SS, SELF-THREADING
11	1	75156	ROTARY WORM DRIVE GEAR
12	1	71656	MOTOR, 24VCD WITH INTERNAL CAPACITORS
13	1	75158	1/4IN E RETAINING RING STAINLESS STEEL
14	1	75157	ROTARY WORM COUPLING
15	1	72451	MICROSWITCHES SUBASSY 2401
16	2	70622	SCREW #2-28 X 3/4 LG, SELF-THREADING
17	1	71185	BRACKET
18	1	71106	HUB AND GEAR
19	1	70625	SCREW #6-32 X 7/16 LG
20	1	70965	CAM SHAFT
21	1	71679	MOTOR LEAD
22	1	72138	TRANSFORMER 120VAC .5 A

BYPASS VALVE EXPLODED VIEW AND PARTS LIST

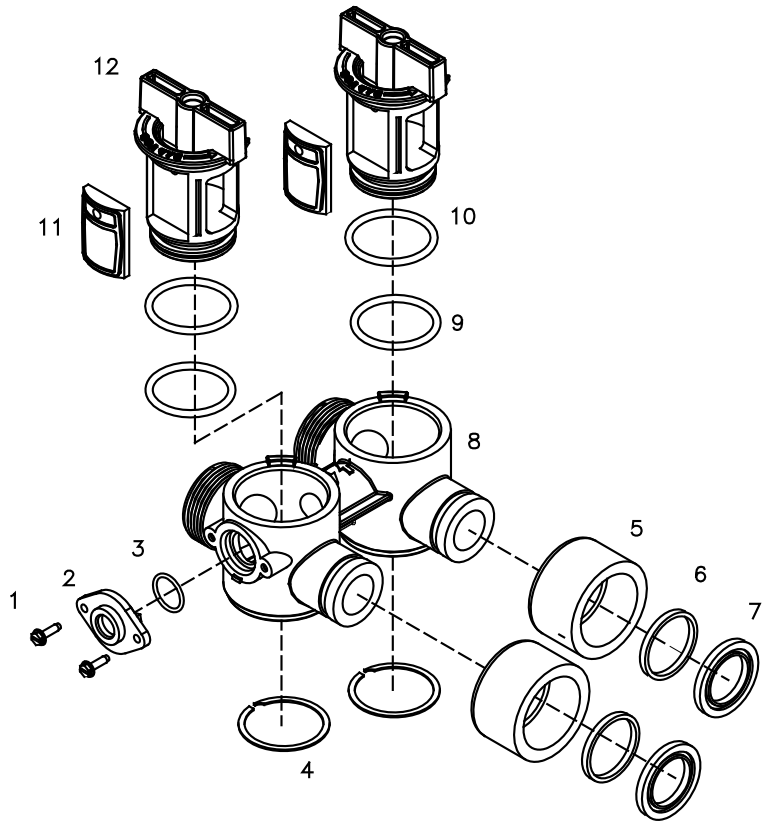

BYPASS VALVE ASSEMBLY PART NUMBER 72668

ITEM	QUANTITY	PART NUMBER	DESCRIPTION
1	2	72599	SCREW 6X32X1/2 TYPE
2	1	72580	BYPASS END CAP 541
3	1	13328	017 O-RING 8730
4	2	72584	RETAINING RING VS-15
5	2	71161	568-363 NUT, BYPASS VALVE
6	2	71162	568-364 RING, NUT RETAINER
7	2	71110	568-320 GASKET
8	1	72669	BYPASS BODY ROTARY
9	2	72585	O-RING 220 DURO
10	2	72586	O-RING 222 DURO
11	2	72583	SEAL BYPASS VALVE
12	2	72670	BYPASS HANDLE ROTARY

SYSTEM EXPLODED VIEW AND PART LIST

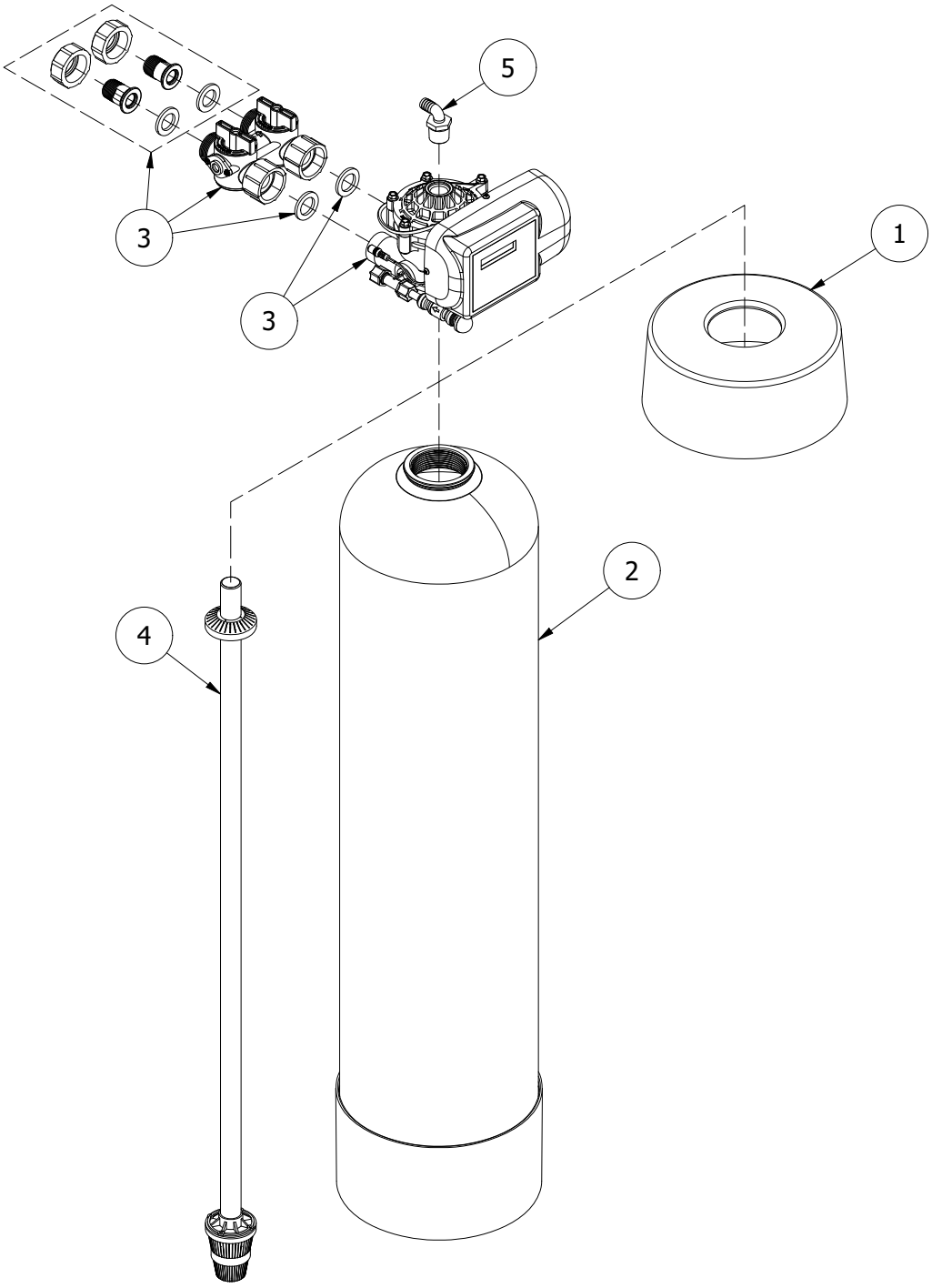

ITEM	QUANTITY	PART NUMBER	DESCRIPTION
1	1	38946	10” PENTAIR PRINTED TANK COLLAR 1.0 & 1.5
2	1	38256	10 X 44 TANK BLACK W/BASE 1.0
		38257	10 X 54 TANK BLACK W/BASE 1.5
3	1	83492	PENTAIR ROTARY VALVE IRON FLT 1.0 & 1.5 WITH BYPASS
4	1	38933	IRON AERATION RISER PIPE ASSY 1.0
		38932	IRON AERATION RISER PIPE ASSY 1.5
5	1	70793	3/4" NPT TO 1/2 ID ELBOW

Tank Size	DIM A	DIM B	DIM C
10x44	10-1/4 in	46 in	51 in
10x54	10-1/4 in	55-7/8 in	61-1/4 in

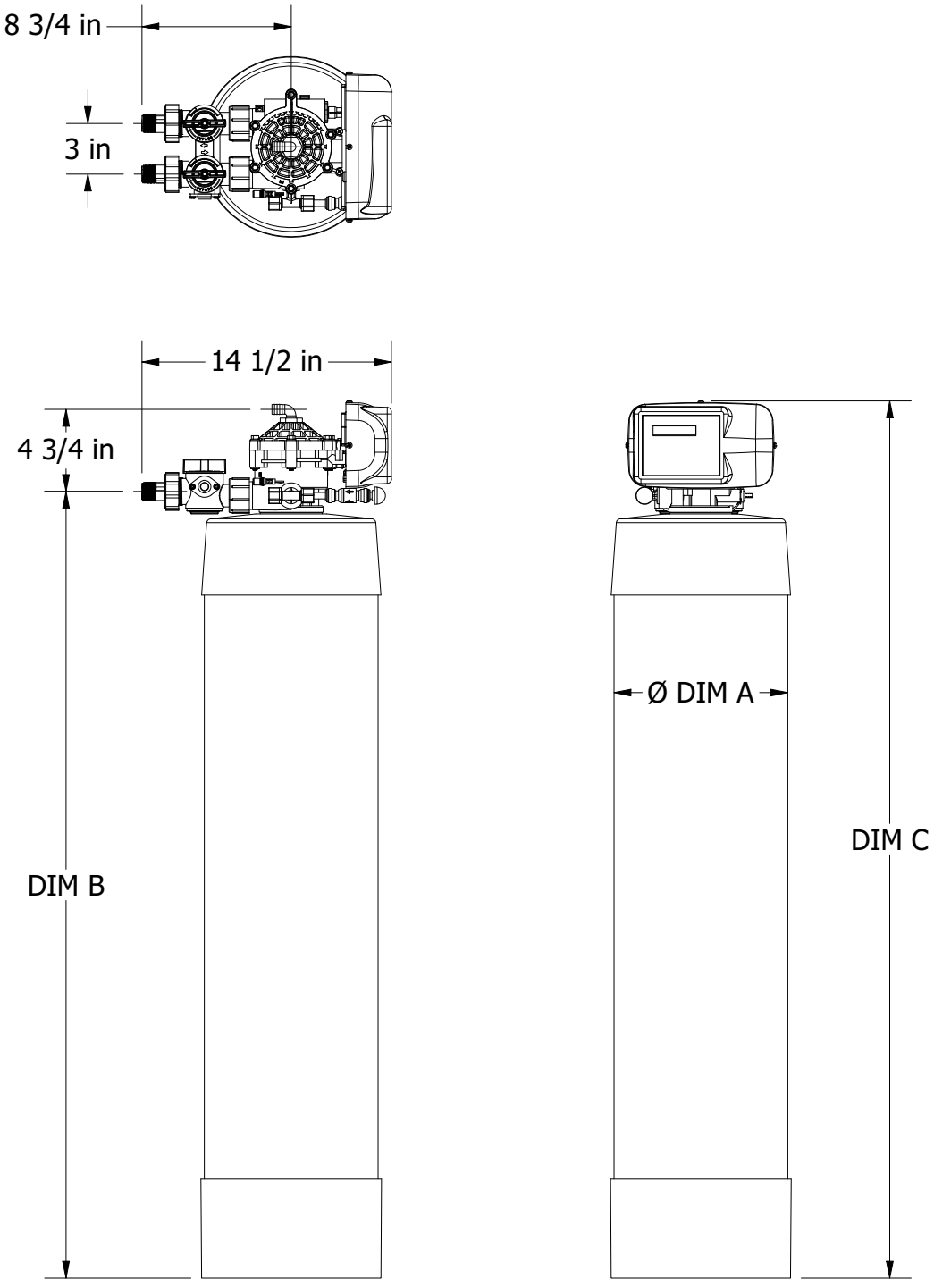

TROUBLESHOOTING GUIDE

SYMPTOM	CAUSE	SOLUTION
1. Untreated water to service	1. Open bypass valve. 2. Loss of filter media 3. The valve is in regeneration. 4. Excessive water use. 5. The unit fails to regenerate. 6. Capacity of filter media is exhausted. 7. Leak between rotor and seal disk. 8. Leak at the riser tube. 9. The valve body and timer are out of synchronization.	1. Close the bypass valve. 2. Refer to SYMPTOM #4 3. Wait for the regeneration to complete. 4. Check the frequency of regenerations. 5. Refer to SYMPTOM #2. 6. Replace the filter bed. 7. Check the rotor and seal disk; replace if necessary. 8. Verify that the riser tube is seated correctly and is not cracked. 9. Synchronize the valve body and timer.
2. The unit fails to regenerate	1. Faulty electrical supply. 2. The control is not set properly. 3. The drive motor is defective. 4. The flow meter is defective. 5. The computer board is defective. 6. The microswitches are defective.	1. Check the electrical items (fuse, transformer). 2. Verify the correct regeneration schedule and reset the control. 3. Replace the drive motor. 4. Replace the flow meter. 5. Replace the computer board. 6. Replace the microswitches.

If the troubleshooting guide did not resolve the unit's symptoms, please contact your local Dealer for service.

TROUBLESHOOTING GUIDE

SYMPTOM	CAUSE	SOLUTION
3. The valve cycles continuously.	Defective or shorted micorswitches	Replace the microswitches.
4. Loss of filter media through the drain line	1. Excessive backwash/fast rinse flow. 2. The lower and/or upper distributor is damaged. 3. A leak between the riser tube and upper distributor.	1. Verify that the backwash flow control is installed and sized correctly. 2. Replace the distributor(s). 3. Verify that the riser tube is seated correctly and is not cracked.
5. Loss of water pressure	1. Mineral or iron build up in the filter tank. 2. Plugged lower and/or upper distributor. 3. Crushed lower and/or upper distributor. 4. Plugged riser pipe.	1. Clean the filter bed and control valve. Increase the regeneration frequency. 2. Remove the debris from the distributor(s). 3. Replace the distributor(s). 4. Remove and clean the riser pipe.
6. Constant water flow to the drain	1. Drive motor failure. 2. Computer board failure. 3. Defective microswitch(es). 4. The valve body and timer are out of synchronization.	1. Replace the drive motor. 2. Replace the computer board. 3. Replace the microswitch(es). 4. Defective microswitch(es).

If the troubleshooting guide did not resolve the unit's symptoms, please contact your local Dealer for service.

Water Treatment Systems Limited Product Warranty

STATEMENT OF LIMITED PRODUCT WARRANTY

Limited Warranty Coverage
For Pentair product(s) Softeners and Tank filters. The products are warranted to be free from defects in material and/or workmanship under normal use and service for the following:

The Resin/Media tank and Brine tank (if applicable), will carry a ten (10) year warranty from the date of shipment. The valve body will also carry a (10) year warranty. The electrical will carry a five (5) year warranty. The filter media is not warranted. The filter media service life is dependent on the specific water conditions and usage. Any replacement product(s) provided by Pentair pursuant to this Limited Warranty will be warranted only for the remainder of the original limited warranty period or thirty (30) days from the date of shipment, whichever is longer.

The following are specifically excluded from the Limited Warranty coverage provided herein:
- Defects or problems not reported to Pentair during the applicable warranty period.
- Any products manufactured by other companies that are used in connection with Pentair product.
- Problems resulting from the alteration, modification, misuse, abuse, neglect, improper care, maintenance or negligent use, including but not limited to unprotected outdoor installation of any Pentair product.

Procedure for Obtaining Limited Warranty Coverage
In order to obtain the benefits of this Limited Warranty, defective part(s) and/or product(s) must be returned to Pentair as soon as possible after discovery of the defect, but not later than the expiration date of the warranty period provided in this Limited Warranty. The Technical Service Department at Pentair will issue a Warranty Return Authorization (WRA) number for the defective part(s) or product(s) which must be clearly marked on the outside of the package being returned. Packages must be shipped freight prepaid, along with a letter stating the part number, serial number, if any, the date of purchase of the item which is claimed to be defective and a brief description of the problem detected. Pentair is not responsible under this Limited Warranty for any cost incurred for shipping or transportation in connection with the return of the part(s) or product(s).

Repair or Replacement
Upon receipt of the product and warranty claim, Pentair will verify the reported failure and determine if the part(s) or product(s) is/are covered by this Limited Warranty. If this Limited Warranty applies, Pentair will, at its option, repair or replace the part(s) or product(s).

No Liability for Consequential Damages
Unless otherwise required by applicable law, Pentair shall not be liable for any damages whatsoever (including without limitation, loss time, inconvenience, expenses such as telephone calls, labor or material charges incurred in connection with the removal or replacement of the part(s) or product(s), special, incidental, consequential, or indirect damages for personal injury, loss of business profits, business interruption, loss of business information, or any other pecuniary loss) arising out of the use of or inability to use the defective part(s) or product(s), even if Pentair has been advised of the possibility of such damages. Pentair entire liability under any provision of this Limited Warranty shall be limited to the amount actually paid for the part(s) or product(s).
NOTE: Because some states/jurisdictions do not allow the exclusion or limitation of incidental or consequential damages, the above limitation or exclusion may not apply.

No Other Warranties:
Pentair specifically disclaims all other warranties, either express or implied, including, but not limited to implied warranties of merchantability and fitness for a particular purpose, with regard to the part(s), product(s) and/or any accompanying written materials. This limited warranty gives you specific legal rights. You may have other rights that vary from state/jurisdiction to state/jurisdiction.

Order Department Direct Line: 847-758-5973 • Fax: 847-437-5539
Toll-free: 800-811-3489

Notes

Notes



18345 BISHOPS DR., SUITE 200, BROOKFIELD, WI 53005 USA
PENTAIR.COM | CUSTOMER SERVICE: 800.811.3489 | systems-tech-support@pentair.com
©2020 Pentair Residential Filtration, LLC. All rights reserved.
§For a detailed list of where Pentair trademarks are registered, please visit PENTAIR.COM/brands.
Pentair trademarks and logos are owned by Pentair plc or its affiliates.
Third party registered and unregistered trademarks and logos are the property of their respective owners.

37300 REV A JAN20